ITT

Industrial Process

Installation, Operation, and Maintenance Manual

Handwheel Operated Valves (970)

Engineered for life

Table of Contents

Introduction and Safety

Safety message levels

Definitions

Safety message level	Indication
DANGER:	A hazardous situation which, if not avoided, will result in death or serious injury
WARNING:	A hazardous situation which, if not avoided, could result in death or serious injury
CAUTION:	A hazardous situation which, if not avoided, could result in minor or moderate injury
Electrical Hazard:	The possibility of electrical risks if instructions are not followed in a proper manner
NOTICE:	• A potential situation which, if not avoided, could result in an undesirable result or state • A practice not related to personal injury

User health and safety

General precautions

This product is designed and manufactured using good workmanship and materials, and meets all applicable industry standards. This product should be used only as recommended by an ITT engineer.

WARNING:

- Misapplication of the valve can result in injury or property damage. Select valves and valve components of the proper materials and make sure that they are consistent with your specific performance requirements. Incorrect application of this product includes but is not limited to:
  - Exceeding the pressure or temperature rating
  - Failing to maintain this product according to the recommendations
  - Using this product to handle caustic or hazardous substances that it is not designed to handle
- If the product exhibits any indication of leakage, do not operate. Isolate the product and either repair it or replace it as outlined within this manual.

Qualifications and training

The personnel responsible for the assembly, operation, inspection, and maintenance of the valve must be appropriately qualified. The operating company must do the following tasks:

- Define the responsibilities and competency of all personnel handling this equipment.
- Provide instruction and training.
- Ensure that the contents of the operating instructions have been fully understood by the personnel.

Instruction and training can be carried out by either ITT or the reseller of the valve by order of the operating company.

Non-compliance risks

Failure to comply with all safety precautions can result in the following conditions:

- Death or serious injury due to electrical, mechanical, and chemical influences
- Environmental damage due to the leakage of dangerous materials
- Product damage
- Property damage
- Loss of all claims for damages

Operational safety precautions

Be aware of these safety precautions when operating this product:

- Do not leave hot or cold components of the product unsecured against contact if they are a source of danger.
- Do not remove the contact guard for moving parts when the product is in operation. Never operate the product without the contact guard installed.
- Do not hang items from the product. Any accessories must be firmly or permanently attached.
- Do not use the product as a step or hand hold.
- Do not paint over the identification tag, warnings, notices, or other identification marks associated with the product.

Maintenance safety precautions

Be aware of these safety precautions when performing maintenance on this product:

- You must decontaminate the product if it has been exposed to harmful substances such as caustic chemicals.
- You must immediately fit or reactivate all safety and protective equipment upon completion of work.

Use of unauthorized parts

Reconstruction or modification of the product is only permissible after consultation with ITT. Genuine spare parts and accessories authorized by ITT serve to maintain safety. Use of non-genuine ITT parts can annul liability of the manufacturer for the consequences. ITT parts are not to be used in conjunction with products not supplied by ITT as this improper use can annul all liability for the consequences.

Unacceptable modes of operation

The operational reliability of this product is only guaranteed when it is used as designated. The operating limits given on the identification tag and in the data sheet may not be exceeded under any circumstances. If the identification tag is missing or worn, contact ITT for specific instructions.

Transportation and Storage

Handling and unpacking guidelines

CAUTION:
Always observe the applicable standards and regulations regarding the prevention of accidents when handling the product.

Handling guidelines

Follow these guidelines when handling the product to prevent damage:

- Use care when handling the product.
- Leave protective caps and covers on the product until installation.

Unpacking guidelines

Follow these guidelines when unpacking the product:

1. Inspect the package for damaged or missing items upon delivery.
2. Note any damaged or missing items on the receipt and freight bill.
3. If anything is out of order, file a claim with the shipping company.

Storage, disposal, and return requirements

Storage

If you are not immediately installing the product after delivery, store it as follows:

- Store the product in a dry room that maintains a constant temperature.
- Make sure that the products are not stacked on top of one another.

Disposal

Dispose of this product and associated components in compliance with federal, state, and local regulations.

Return

Ensure these requirements are met before you return a product to ITT:

- Contact ITT for specific instructions on how to return the product.
- Clean the valve of all hazardous material.
- Complete a Material Safety Data Sheet or Process Data Sheet for any process fluid that could remain on the valve.
- Obtain a Return Material Authorization from the factory.

Product Description

Topworks identification

Model number

Code	Description
970	Rising handwheel with travel stop

Bonnet description

Non-Sealed bonnet

The non-sealed bonnet has a weep hole that permits leakage of the process fluid if the diaphragm ruptures.

Valve diaphragm identification

Diaphragm tab codes

All diaphragm materials and physical properties are batch traceable via permanent codes molded into the diaphragm tabs. The molding date, grade of diaphragm, and valve size provide traceability to original batch records.

Figure 1: Elastomer diaphragm front

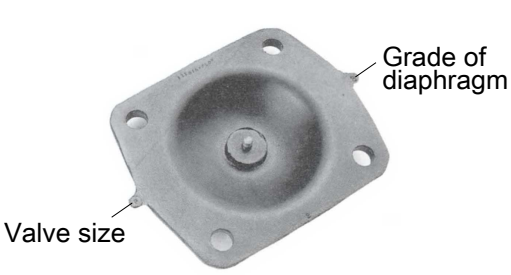

Figure 2: Elastomer diaphragm back

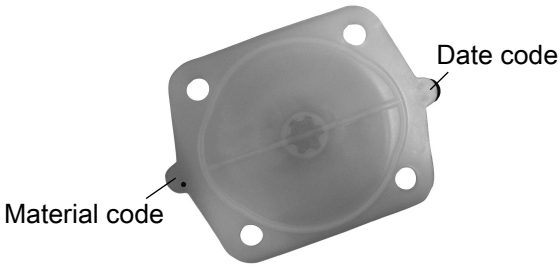

Figure 3: PTFE diaphragm

Installation

Install the valve and topworks

NOTICE:

The topworks size and configuration can limit the actual operating pressure. Consult the engineering catalog for topworks sizing. Consult the factory or engineering catalog for vacuum operation.

1. If you have a weld end valve, then consider the following:

If you are welding ...	Then ...
Manually	Remove the topworks. Remove the diaphragm.
In line for schedule 5 or lighter pipe and tubing	You can weld with automatic equipment. Before you perform the weld: 1. Do not remove the topworks. 2. Set the valve to the open position. 3. Properly purge the valve with an inert gas.

2. Install the valve.

   Install with the raised hash marks (castings) or small machined dots (forgings) on the valve body at the 12 o'clock position to achieve the optimum drain angle.

3. Prior to pressurization (with the valve slightly open), tighten the bonnet fasteners.

   For more information, see *Tighten the bonnet fasteners* (page 6).
4. Cycle the valve two to three times to verify smooth operation.
5. Set the travel stop.

   For more information, see *Set the travel stop* (page 7).

Tighten the bonnet fasteners

CAUTION:

Do not tighten fasteners while the system is pressurized or at elevated temperatures (greater than 100°F (38°C)).

1. Depressurize the system.
2. Tighten the bonnet fasteners in a crisscross pattern.

   For more information, see *Fastener torque table for valve body to topworks* (page 7).
3. Make multiple crisscross passes to build up torque to the final table value. Make additional crisscross passes using final table values to evenly tighten each fastener to within 5% of torque value.
4. Retighten the bonnet fasteners as noted above at ambient conditions after the system has cycled through operating pressure and temperature.

5. Monitor the valve for leakage:

If leakage ...	Then ...
Occurs at the body/bonnet flange sealing area	Depressurize the system and retighten the bonnet fasteners as noted above.
Continues	Depressurize the system and retighten the bonnet fasteners as noted above. (maximum 3rd re-torque)
Continues	Replace the valve diaphragm.

For more information, see *Replace the valve diaphragm* (page 11).

Fastener torque table for valve body to topworks

Values given are for lubricated fasteners.

Valve size		PTFE diaphragm		Elastomer diaphragm	
Inch	**DN**	**in-lb**	**N-m**	**in-lb**	**N-m**
0.50	15	25–80	2.8–9.1	20–40	2.3–4.5
0.75	20	50–80	5.7–9.1	20–50	2.3–5.7
1.00	25	65–120	7.4–13.6	45–70	5.1–7.9
1.25 and 1.50	32 and 40	200–225	23–25	75–130	8.5–14.7
2.00	50	225–300	25–34	100–180	11–20

Guidelines

- Minimum values given will provide a longer diaphragm cycle life for valves in non-autoclave and low thermal cycle conditions.
- Maximum values given may be necessary for autoclave conditions and for high thermal cycle conditions.
- Torques should be applied at near ambient conditions (less than 100ºF (38ºC)).

Set the travel stop

1. Do you have a test fixture?
   - If Yes: Follow steps 2 through 6.
   - If No: Proceed to step 7.

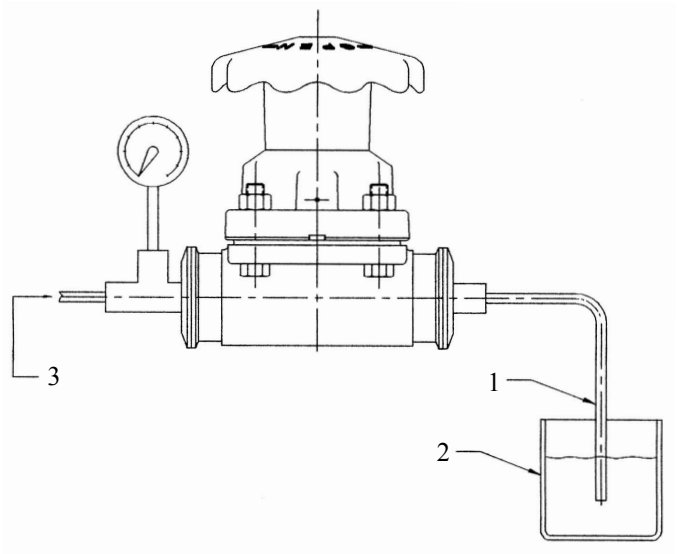

   1. Tubing
   2. Beaker of water
   3. Air supply
2. Remove the travel stop screw.

3. Supply air pressure equal to the system operating pressure to one side of the valve.
4. Cap the other side of the valve and install a venting rubber or plastic tube.
5. Hold the tube in a container of water.
6. Turn the handwheel closed until the leakage stops.

   Air bubbles indicate leakage.
7. Remove the travel stop screw.
8. Do you have a weir valve?
   - If Yes: Follow the steps below.
   - If No: You must set the travel stop with a test fixture, following the instructions above.
9. If you have an elastomer diaphragm, then follow the steps below:
   a) Remove pressure from the line containing the valve.
   b) Remove the bonnet fasteners, nuts, and bonnet.
   c) Unscrew the diaphragm from the compressor.

      Leave the compressor on the spindle.
   d) Replace the bonnet on the valve body without a diaphragm.
   e) Replace two bonnet fasteners and nuts on opposite sides of the bonnet and hand tighten.
   f) Turn the handwheel until the compressor touches the weir.

      The valve will not close further.
   g) Push down on the handwheel until it bottoms on the travel stop surface of the bonnet.
   h) Install and tighten the travel stop screw.
   i) Remove the bonnet from the valve body.
   j) Screw a diaphragm into the compressor and hand tighten. Back off the diaphragm until the bolt holes in the diaphragm and bonnet flange align.
   k) Rotate the handwheel counterclockwise just enough to permit the flange area of the diaphragm to rest flat against the flange area of the bonnet.
   l) Replace the bonnet on the valve body.

      The bonnet should be opened one half to one turn of the handwheel.
   m) Tighten the bonnet fasteners.

      For more information, see Tighten the bonnet fasteners in Installation.
10. If you have a PTFE diaphragm, then follow the steps below:
    a) Remove the travel stop screw.
    b) Turn the handwheel clockwise until you feel the initial resistance of the diaphragm seating. From this point, turn the handwheel another 5/8 turn.
    c) Push down on the handwheel until it bottoms on the travel stop surface of the bonnet.
    d) Install and tighten the travel stop screw.

Operation

Topworks operation

The valve is closed with a clockwise rotation of the handwheel.

Valve size		Stem travel		Number of turns
Inch	DN	Inch	mm	
0.50	15	0.25	6.4	2
0.75	20	0.38	9.5	3
1.00	25	0.50	13	4
1.25 and 1.50	32 and 40	0.81	21	4.88
2.00	50	1.12	29	6.75

Maintenance

Precautions

WARNING:

- All procedures must be performed by qualified personnel.
- When the process fluid is hazardous, thermal (hot or cold), or corrosive, take extra precautions. Employ the appropriate safety devices and be prepared to control a process media leak.
- Always wear protective clothing and equipment to safeguard the eyes, face, hands, skin, and lungs from the particular fluid in the line.

Inspection

Inspection area	What to look for	Action if problem is found
External valve parts	Excessive wear or corrosion	• Replace the affected parts • Contact ITT to obtain replacement parts or for specific instructions
Non sealed bonnet	Fluid weeping from the weep hole	Replace the valve diaphragm
Topworks	Spindle binding, excessive noise, or dried lubricant	
Diaphragm and valve body	Leakage between the diaphragm and valve body	Tighten the bonnet fasteners

For more information, see:

- Replace the valve diaphragm in this manual.
- Lubrication requirements in this manual.
- Tighten the bonnet fasteners in this manual.

Lubrication requirements

WARNING:

Standard lubricants are as outlined below. Special lubricants may be required for oxygen or other unique services. Contact ITT for evaluation of non-standard lubricants.

Lubrication schedule

Remove residual grease prior to re-lubrication. Lubricate the spindle threads, lower spindle face and neck where it interfaces with the compressor, and o-ring whenever the topworks is disassembled. Bonnets are not equipped with grease fittings and must be disassembled to be lubricated.

Acceptable lubricants

Brand	Lubricant type
Chevron	FM ALC EP 2 (FDA Compliant) DOW 111 for o-ring

Disassemble the valve

1. Remove all line pressure.
2. Turn the valve to the open position counter clockwise at least one turn.
3. Remove the bonnet fasteners.

4. Lift the topworks assembly from the valve body.
   a) Lift off the bonnet.
   b) Rotate the handwheel to lower the compressor diaphragm assembly.

Replace the valve diaphragm

1. Disassemble the valve.

   For more information, see Disassemble the valve in this manual.
2. Unscrew the diaphragm from the compressor by turning the diaphragm counterclockwise.

   The replacement diaphragm should be identical in size and grade to the original diaphragm.
3. If replacing a PTFE diaphragm, follow these steps.
   a) Install the new elastomer backing cushion over the tube nut.

   b) Invert the PTFE diaphragm by pressing the center of the diaphragm face with your thumbs while holding the edge of the diaphragm with your fingers.

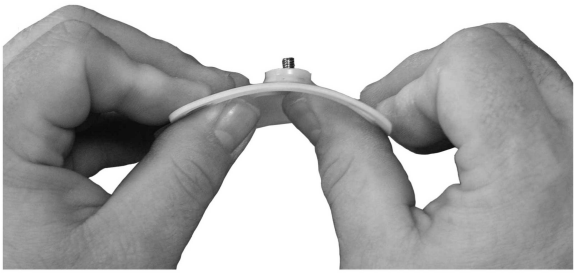

   c) Engage the threads of the diaphragm into the tube nut by rotating clockwise.

   d) Continue rotating the PTFE diaphragm clockwise into the compressor while securing the backing cushion from rotating.

4. Rotate the diaphragm until hard stop or heavy resistance is achieved and additional force does not significantly rotate the diaphragm into the compressor.

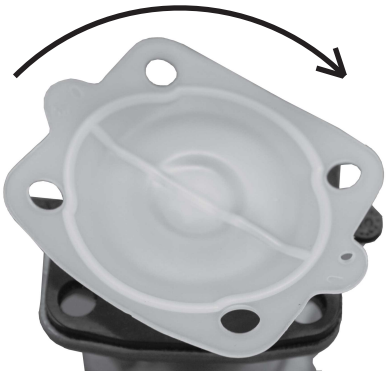

5. If replacing a PTFE diaphragm, re-invert the diaphragm.

6. Back off (no more than half turn) until the bolt holes in diaphragm and the bonnet flange align.

7. Rotate the handwheel counterclockwise just enough to permit the flange area of the diaphragm to rest flat against the flange area of the bonnet.
8. Replace the topworks assembly on the body and tighten the bonnet fasteners.

   For more information, see *Tighten the bonnet fasteners* (page 6).
9. Set the travel stop.

   For more information, see *Set the travel stop* (page 7).

Change the diaphragm type

1. Remove the bonnet nuts and lift off the bonnet.
2. Remove the travel stop screw.
3. Turn the handwheel clockwise to lower the compressor and slide the compressor off the spindle.
4. Change to the new compressor.

If you are changing ...	Then ...
From an elastomer to a PTFE diaphragm	Install a tube nut into the hexagonal hole in the new compressor
From a PTFE to an elastomer diaphragm	Change to the new compressor.

5. Lubricate the spindle end where it interfaces with the compressor.
6. Locate the new compressor on the spindle and turn the handwheel counter clockwise to raise the assembly into the bonnet.
7. Replace the diaphragm.

   For more information, see *Replace the valve diaphragm* (page 11).

Replace the o-ring

1. Remove the travel stop screw and handwheel.
2. Remove the o-ring from the groove in the bonnet.
3. Clean the o-ring groove.
4. Apply lubricant to the o-ring.
5. Install the o-ring into the groove.
6. Reinstall the handwheel.
7. Set the travel stop.

   For more information, see *Set the travel stop* (page 7).

Parts Listings and Cross-Sectional Drawings

970 stainless steel bonnet

List of parts

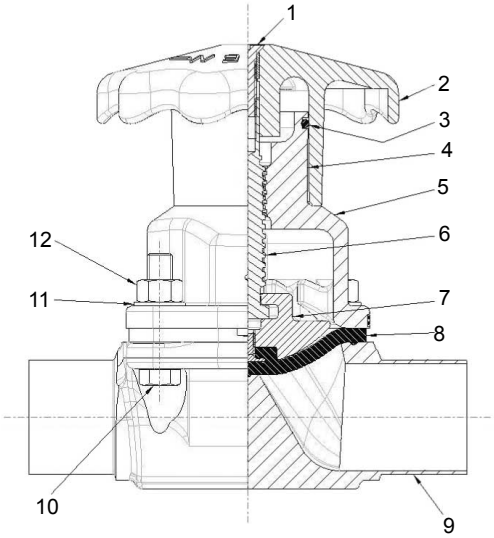

Figure 4

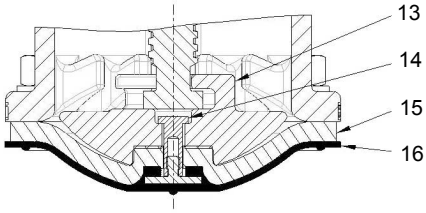

Figure 5: Plastic diaphragm and compressor

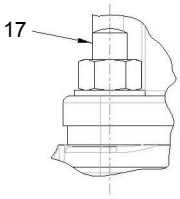

Figure 6: Bolt detail for tank bottom body, block body and fabrications

Item	Description	Material	Quantity
1	Travel stop screw	Stainless steel	1
2	Handwheel	PAS	1
3	O-ring	FKM (FDA)	1
4	Label indicating	Mylar	1
5	Bonnet	Stainless steel	1
6	Spindle	Stainless steel	1
7	Compressor for elastomer	Bronze or stainless steel	1
8	Elastomer diaphragm	EPDM, Buna N	1
9	Body	Stainless steel	1
10	Cap screw	Stainless steel	4
11	Washer	Stainless steel	4

Item	Description	Material	Quantity
12	Nut	Stainless steel	4
13	Compressor for plastic	Bronze or stainless steel	1
14	Tube nut	Brass	1
15	Backing cushion	EPDM	1
16	Plastic diaphragm	PTFE, Grade TM	1
17	Stud	Stainless steel[1]	As required

[1] ASME grade fasteners available on tank bottom valve

ITT

Provided by:

Holland®
APPLIED TECHNOLOGIES
www.hollandapt.com
Phone: 800-800-8464

Visit our Web site for the latest version of this document and more information
www.ittpureflo.com

ITT Pure-Flo
33 Centerville Raod
Lancaster, PA 17603
USA
Tel. (717) 509–2200
Fax (717) 509–2316

ITT Pure-Flo
Richards Street, Kirkham
Lancashire PR4 2HU
England
Tel. +44-1772-682696
Fax +44-1772-686006