DISTRIBUTED BY:

Holland
APPLIED TECHNOLOGIES



Process and control valves

Product range overview

Pioneers of Flow.

bürkert
FLUID CONTROL SYSTEMS

Content

Process valves in line with your needs 4

Valve actuator technology 6

Manual actuators 8
CLASSIC 9
ELEMENT 10
Electromotive 11
Robolux 12
Rotary actuators 14

Body variants 16

Angle seat valves 17
Globe valves 22
Tube valve body 28
Diaphragm valves 29
Bellows valves 34
Further valve solutions 36

Control & communication 38

Position feedback indicators 39
Control heads 41
Positioners 44
Manufacturer-independent valve automation 47
Process controllers 48

ELEMENT process valve systems at a glance 50

Bürkert Fluid Control Systems 52

Customisation & development 54

Automation & digitalisation 56

Accessories: diaphragms 58



Why Bürkert is your partner

We work for your success – with thousands of individual solutions for the most diverse requirements in global competition. When it comes to process valves, we look back on decades of experience worldwide, always staying at the forefront of technology.

As your partner in process automation, we provide solutions for your applications across all industries – whether they involve food and beverages, dairy, pharmaceuticals or general process automation. With our technical expertise in the process industry, we are able to offer you the automation concept that best suits the requirements of your application.

Process valves in line with your needs

A flexible system of switching actuators is required for the wide range of valves. Our uncompromising modularity is always at the heart of our approach. Both the manual and automated solutions were designed with longevity in mind.

3 Automation unit



+

2 Valve actuator



+

1 Valve body









Valve actuator technology

Overview

In Bürkert's extensive product portfolio, you'll always find the ideal actuator solution: from simple and robust manual actuators to proven CLASSIC actuators and our ELEMENT series featuring both pneumatically operated and electromotive actuators that meet the highest standards for slimline, hygienic designs. In addition, unique innovations such as our Robolux valves with twin-weir technology enable efficient process control at the highest level.



Manual

Simple | Durable | Direct

Page 8



CLASSIC

Durable | Reliable | Interface-capable

Page 9



ELEMENT

Hygienic design | Integrated pilot air duct | Visually appealing

Page 10



Electromotive

Highest precision | Fast | No air required

Page 11



Robolux

Unique | Intelligent | Robust

Page 12



Pneumatic rotary actuator

Flexible | Interface-capable | Lightweight

Page 14



Electric rotary actuator

Robust | No air required | Precise

Page 15

Manual actuators

In many machines and plants, it is essential that valves can be manually operated with a mechanism that is as simple as possible.

Bürkert offers a wide range of manually operated valves designed for reliability and durability. Handwheels and levers are used to operate an extensive variety of valves with nominal diameters from DN 8 to DN 100, and our portfolio has been developed to include a wide selection of materials and options. We focus on using materials that guarantee long-term stability in difficult operating environments, such as PPS and stainless steel. Many of the manual solutions include features such as integrated locking and minimum/maximum stroke limitation.

Valve sizes:

- DN 8 to DN 100

Materials:

- PPS – stainless steel
- Stainless steel – stainless steel

Special features

- Integrated locking
- Minimum/maximum stroke limitation
- Position indicator

Manual actuators in diaphragm and seat design

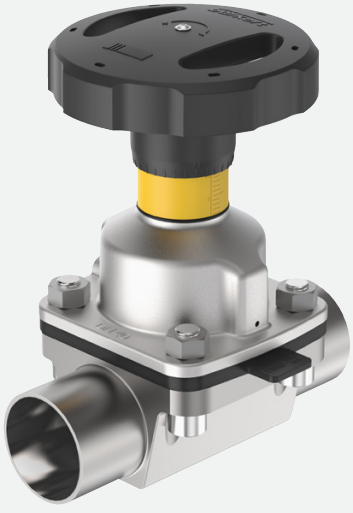



CLASSIC

This actuator is used worldwide in machines and plants for a wide variety of tasks. Established for decades, it's a piece of equipment that's simply installed once and then keeps running reliably.

The use of a patented filler piece that does not obstruct the stroke makes this actuator highly energy-efficient. Its life expectancy is also very high because all plastic components are manufactured in house using injection moulding and assembled in an almost fully automated process, in compliance with our exceptional quality standards. The high quality of the cylinder inner surface and the flexible N-ring seal are the key to this amazing longevity.

The wide range of diameters means that you only buy what you actually need. Polyamide (PA) is used for standard applications, while polyphenylene sulphide (PPS) is for high ambient temperatures or when increased chemical resistance is required. Stainless steel, meanwhile, ensures the highest hygiene requirements are met. For applications with high hygiene standards, another actuator type is also available, made entirely of stainless steel with a smooth surface.

Core components of the CLASSIC actuator

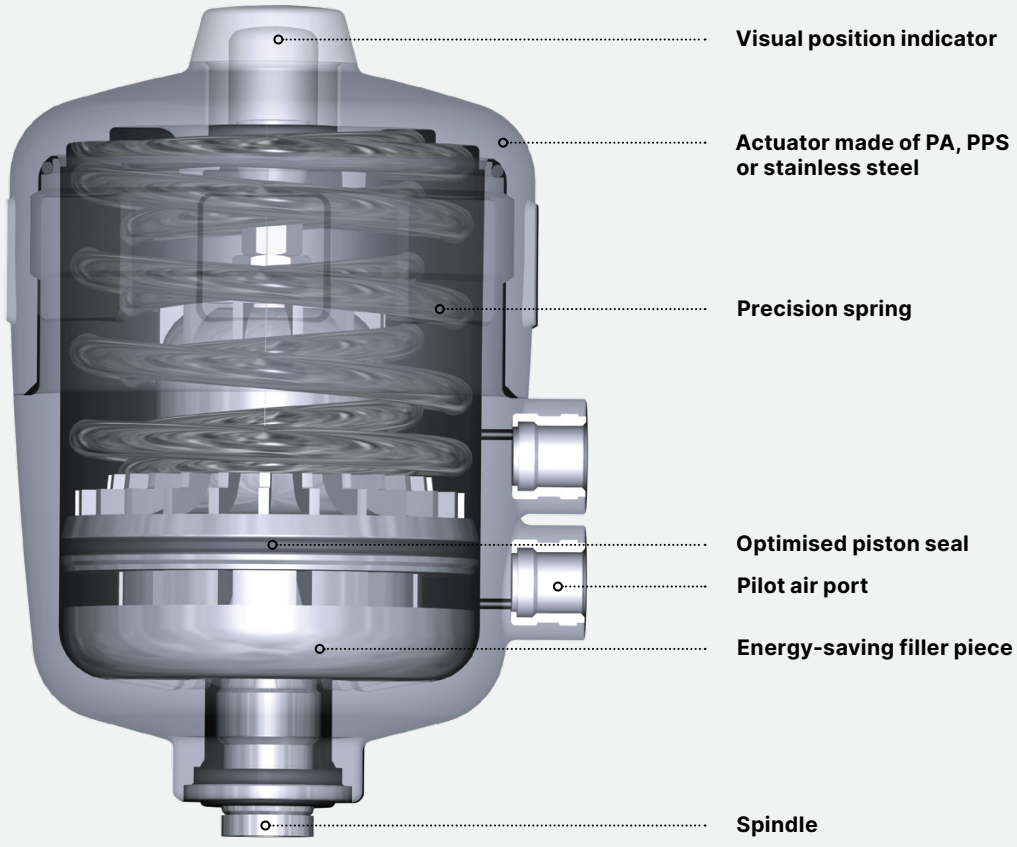

ELEMENT

The actuators of the ELEMENT product family combine the excellent technology of the CLASSIC series with an extraordinary design.

Chemical resistance and modular connectivity meet the clean lines of a stainless steel valve without external tubing and connections between the actuator chamber and the integrated control unit. The ELEMENT actuators feature an impressive internal pilot air duct: in conjunction with the integrated control unit, the aeration of the spring chamber ensures that both actuator chambers are only ever supplied with clean pilot air. This means:

- no corrosion of the actuator springs
- no contamination of the actuator interior
- no moisture getting into the automation unit along the spindle extension
- no biological contamination in the interior
- a longer service life

The high quality of the precision-moulded parts reduces actuator friction, making these actuators perfect for shut-off and control tasks. As a result, ELEMENT is improving the availability of fast and precise control valves right across the globe.

Core components of the ELEMENT actuator

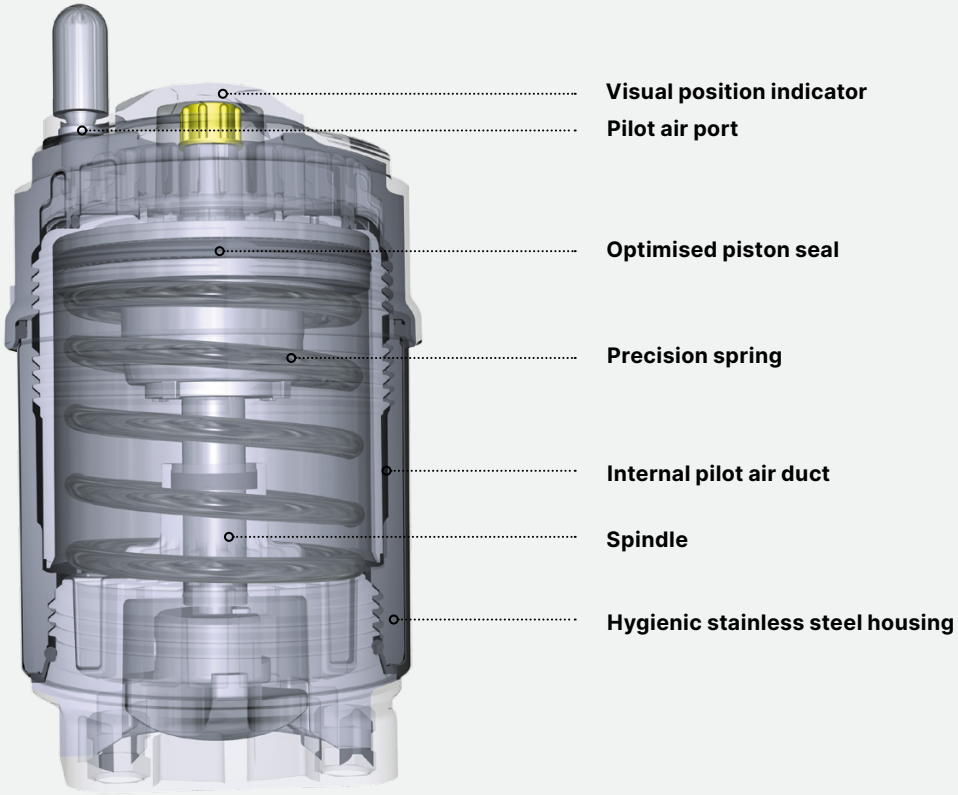

Electromotive

For shut-off and control tasks under demanding usage conditions.

The electromotive linear actuator with fully integrated automation represents an alternative to conventional pneumatically operated solutions for applications requiring maximum precision, smart diagnostics and programmability of travel speed, a simple design, and easy operation without compressed air.

The electromotive linear actuator consists of a brushless DC motor, gears and a threaded spindle, which form a single unit that can be installed quickly and easily. The valve spindle connected to the threaded spindle transfers the force to the control cone.

The valve body and actuator adapter are compatible with our proven pneumatic seat valve portfolio. As a result, the actuator can be combined with various process valve bodies to create a fully automated electromotive process valve.

Core components of the electromotive actuator



HMI module
Easy operation and configuration on site

360° LED status indicator
Clearly visible from all angles

SAFEPOS energy-pack
Guarantees movement to a programmable safety position in the event of a power failure

Unique closed design
Easy to clean, ensuring hygiene requirements are met

Mechanical valve position indicator independent of the power supply

Valve interface
Perfect adaptation to valve body

Technology innovation

Robolux

Unparalleled hygienic diaphragm valve block solutions.

Robolux's compact, intelligent and reliable design ensures greater efficiency in the process.

Inside the stainless steel actuator there are two independently operating valve actuators that control a common diaphragm on two seats. This patented Robolux technology reduces internal volume and minimises the installation volume of the valve system. In the form of block solutions, the Robolux concept can be seamlessly combined with conventional single-seat diaphragm valves.

Optimised position feedback indicators and control heads enable compact and hygienic automation, in line with Bürkert's end-to-end, decentralised automation concept.

- The highest evolutionary stage of hygienic block solutions
- Reduced internal volume
- Reduced space requirements
- Reduced maintenance requirements
- Modular concept

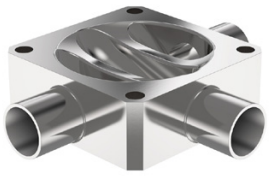

Twin-weir technology

Did you know?

The secret of Robolux lies within its pneumatic valve actuator, where, instead of the usual single diaphragm valve seat, there are two independently operating valve actuators, each covered by a single diaphragm.

→ **www.burkert.com/robolux**

Visit our eShop

→ **Type 2036**

→ **Type 8806**

Prevent contamination

Efficient cleaning processes

Faster maintenance processes

Increased flexibility in plant design

Robolux operating principle – two valve actuators in one actuator housing

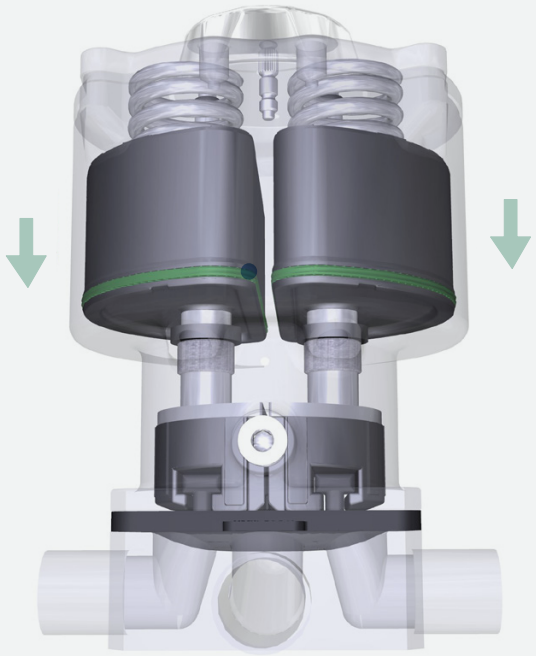

Valve 1 / valve 2 **closed**

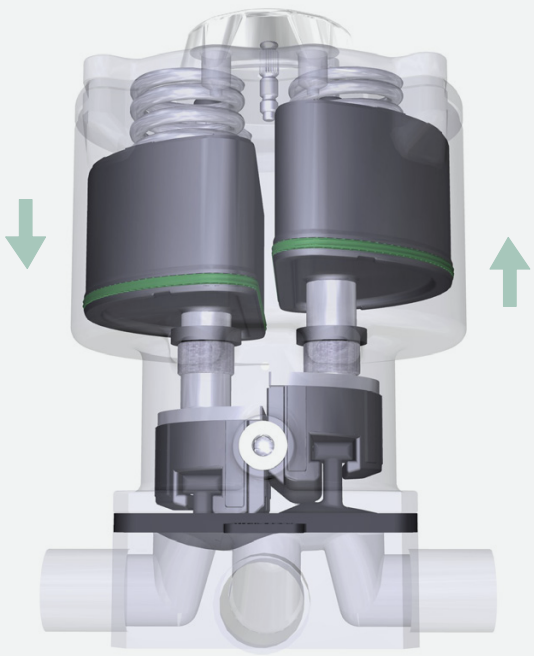

Valve 1 **closed** / valve 2 **open**

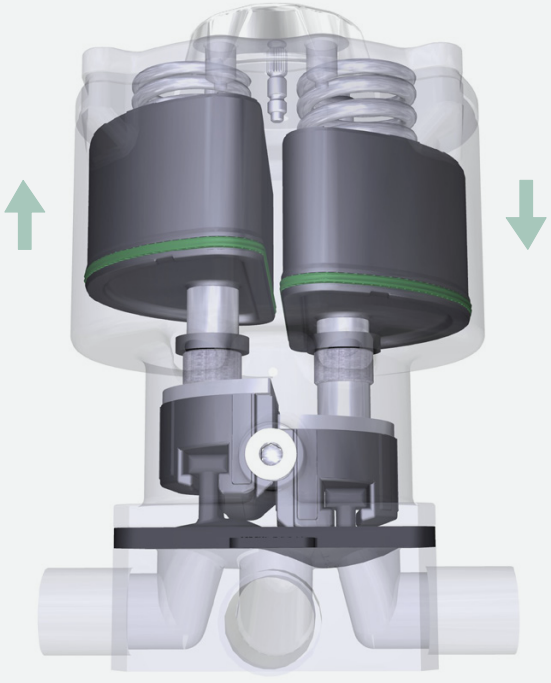

Valve 1 **open** / valve 2 **closed**

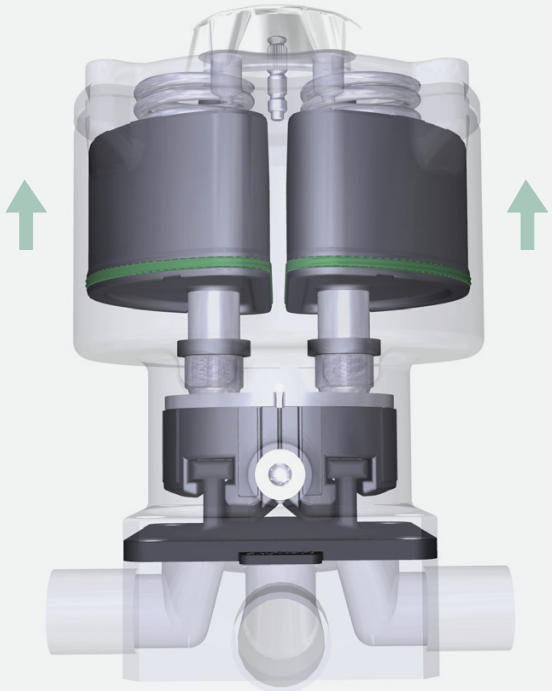

Valve 1 / valve 2 **open**

Rotary actuators

Pneumatic rotary actuators

Bürkert's range of pneumatic rotary actuators is characterised by its diversity and thus offers the possibility to draw from a portfolio that has the right actuator for almost every application.

For modulating control, the actuator can be perfectly integrated into the Bürkert portfolio of SideCONTROL positioners. The actuators are available in different housing materials and with various coatings to suit the application.

Core components of a pneumatic rotary actuator

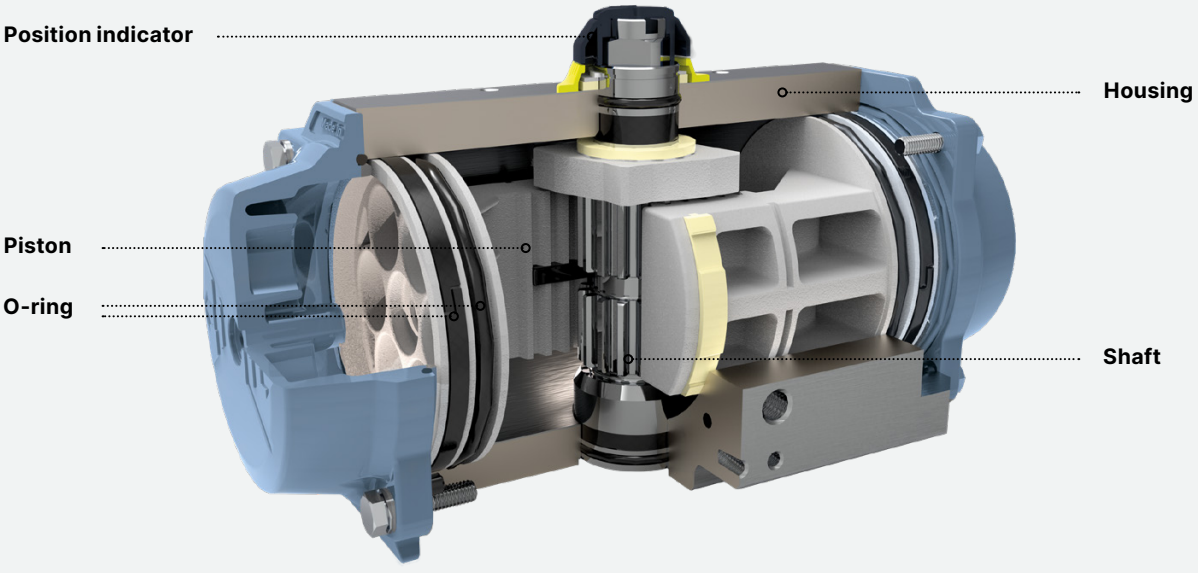

Electric actuators

Bürkert's electric rotary actuators are suitable for a wide variety of applications. Actuator models with a wider torque range are also available on request. The actuators can be used with all common DC and AC voltages and have robust electrical connections. Thanks to the valve-side interface in accordance with ISO 5211, the actuators can be combined with a wide range of standardised rotary valves. The actuators are available both as classic open/close actuators and as control actuators. Electrical end position feedback, manual override, heating resistors and a visual position indicator are included as standard. Further options such as emergency power versions and 180° variants can also be offered.

Core components of an electric rotary actuator

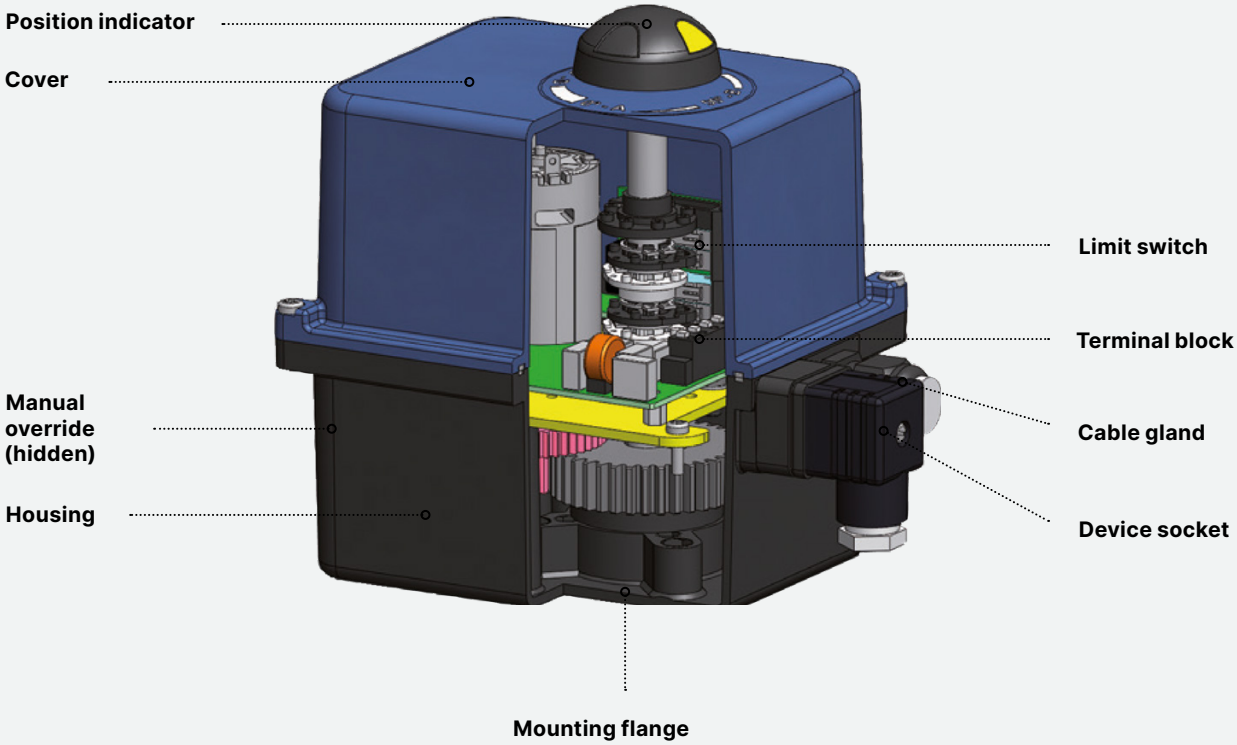

Body variants

Overview

We are your partner when it comes to selecting the best valve for your specific application. The selection process begins with the body. Our portfolio comprises five basic methods for controlling media – from our proven angle seat valves to our family of rotary valves. You can choose between various process connections (flange, thread, clamp, welded connection and so on) in the common standards (such as DIN, ISO and ASME).



Angle seat valves

Page 17



Globe valves

Page 22



Diaphragm valves

Page 29



Bellows valves

Page 34



Others

Page 36

Angle seat valves

High flow rates | Tight-closing | Long service life

A simple valve for large media flows, ideal for steam, heat exchange and flow control applications. Thanks to our groundbreaking innovations, you get the best product features as standard! Bürkert has continuously adapted this already remarkable valve family to meet the requirements of our customers.

It is the ideal alternative to complex ball valves with an actuator. The angle seat valve configuration only needs to be installed once and will then function perfectly. Bürkert's quality is clear to see. We are known as the market leader in this design, which is used successfully in thousands of plants and machines worldwide.

- Media flow below the valve seat – for water and other non-gaseous media. For water hammer-free operation.
- Media flow above the valve seat – for compressible media including gases and steam. Allows smaller actuators to be used.

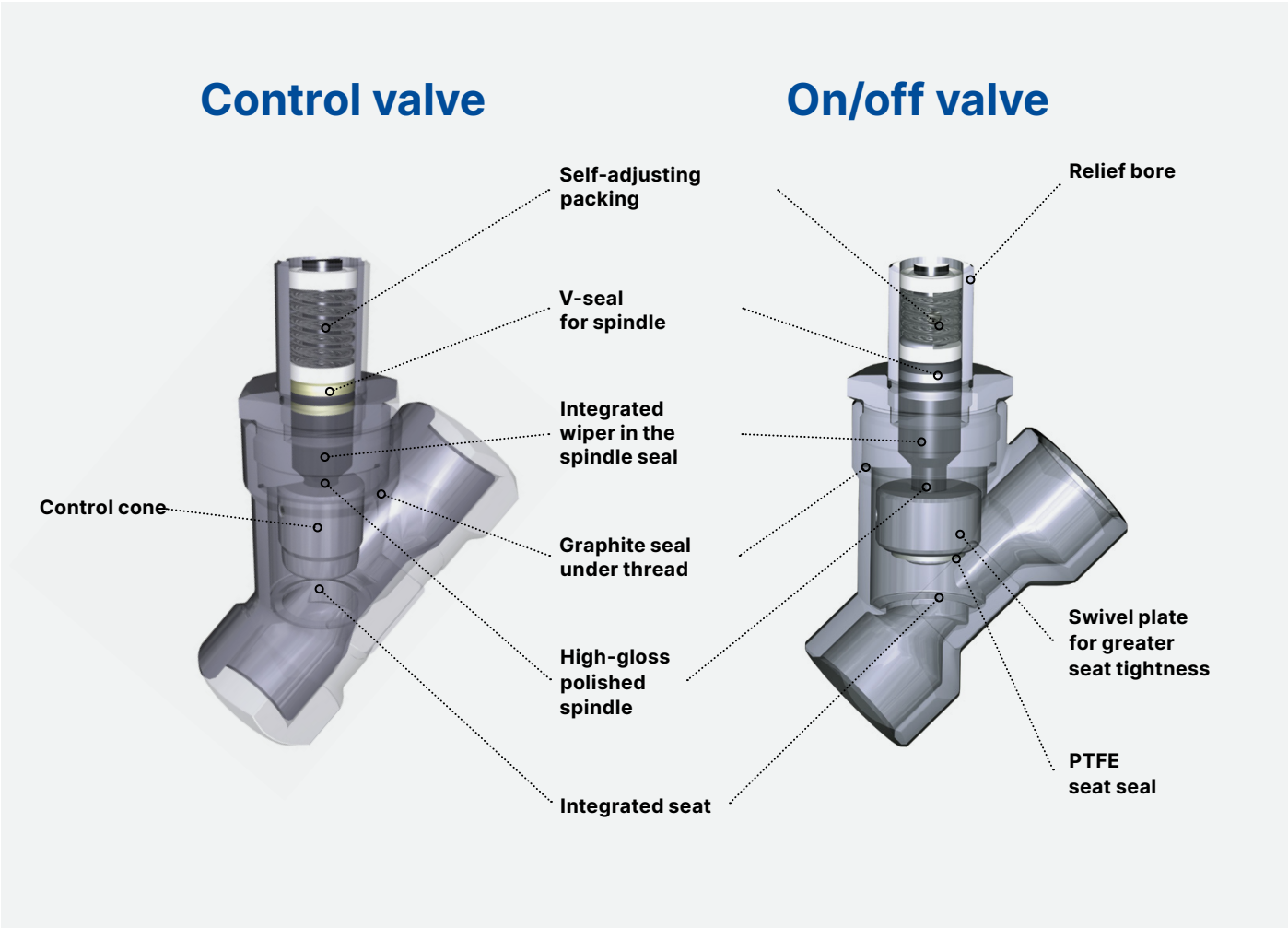

Angle seat control valves



Manual control valve Type 2960

- Excellent control accuracy combined with high flow capacity
- Also suitable for demanding operating conditions
- Robust actuator with optional stroke limitation and locking
- Stainless steel valve body with socket, clamp or welded connection

MANUAL CONTROL VALVE TYPE 2960

Manually operated 2-way angle seat control valve

A robust structure and precise spindle guide make the Type 2960 an excellent choice for control applications exposed to demanding conditions, especially when high flow rates are important. The valve consists of a manual actuator made of durable plastic and an angle seat valve body made of high-quality stainless steel. The spindle seal with v-seals and spring compensation makes manual retightening unnecessary.

Extremely durable	**Robust and hard-wearing**
Extra-high flow rate	**Versatile**



ELEMENT Type 2300

- Excellent control accuracy combined with high flow capacity
- Long service life
- Easy integration of automation units with ELEMENT without external tubing
- Stainless steel valve body with socket, clamp or welded connection

ELEMENT TYPE 2300

Pneumatically operated 2-way angle seat control valve ELEMENT

Our Type 2300 is ideal for reliable, accurate control at high flow rates. The flow characteristic is approximately 35% larger than that of conventional control valves. The highly integrated system consisting of a valve and automation unit has a compact and smooth design. The actuator design allows the easy integration of automation units in all expansion stages. The Type 2300 is characterised by its long service life and tightness.

Extremely durable	**Maximum tightness**
Extra-high flow rate	**High chemical resistance**



Electromotive Type 3360

- Valve body and diaphragm are available in various materials and variants
- Media-wetted surfaces in Ra ≤ 0.38 µm...1.6 µm (optionally electropolished)
- Available in all common connection sizes and variants

CONTROL VALVE TYPE 3360

Electromotive 2-way angle seat control valve

Rapid control even under harsh usage conditions is the domain of our innovative Type 3360. It features the highest precision and an outstanding positioning speed of up to 6 mm/s, which can be adjusted in line with customer requirements. Pressure fluctuations or surges in the medium do not change the stroke of the angle seat valve. A closed design, robust materials and a high protection class (IP65/IP67) make it ideal for handling strict hygiene requirements. Type 3360 is fieldbus-compatible.

Extremely tight	**Extremely fast control up to 6 mm/s**
Highly precise control	**Perfect for difficult conditions**

Angle seat on/off valves

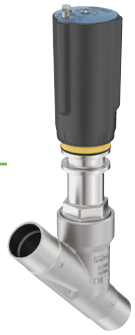

Manual valve Type 2920

- High flow rates
- Long service life
- Robust actuator with optional stroke limitation and locking
- Flow-optimised stainless steel valve body with socket, clamp or welded connection

MANUAL VALVE TYPE 2920

Manually operated 2/2-way angle seat valve

Our Type 2920 is the practical, versatile valve for manually shutting off neutral and aggressive gaseous and liquid media. It consists of a manual, robust plastic actuator and flow-optimised 2-way valve body. Its high degree of tightness enables low-maintenance operation, even at high switching cycles.

High flow rates	**Permanent tightness**
Compact	**Chemically resistant materials**



CLASSIC Type 2000 / Type 2060

- Stainless steel or red bronze valve body
- Highly reliable spindle seal
- Option of stroke limiter and position feedback indicator
- With socket, clamp or welded connection

CLASSIC TYPE 2000 / TYPE 2060

Pneumatically operated 2-way angle seat control valve with plastic or stainless steel actuator

The externally controlled valve consists of a pneumatically operated piston actuator and a 2-way valve body. The Type 2000 actuator is available in PA or PPS plastic versions for different ambient temperatures. Type 2060 is equipped with a robust stainless steel actuator. The valves are characterised by a high degree of tightness due to a self-adjusting spindle seal and high flow rates due to a flow-optimised 2/2-way valve body made of red bronze or investment cast stainless steel.

Robust and durable	**No maintenance**
High flow rates	**Comprehensive range of accessories**



ELEMENT Type 2100

- High flow rates
- Long service life
- Flow-optimised stainless steel valve body with socket, clamp or welded connection
- Suitable for steam

ELEMENT TYPE 2100

Pneumatically operated 2/2-way angle seat valve ELEMENT

This valve is specifically optimised for decentralised process automation – even under difficult usage conditions. Its design allows automation modules to be integrated easily in all expansion stages – from electrical/visual position feedback to pneumatic control and an integrated Feldbus interface. Type 2100 has a compact and smooth design, and features impressive resistance to chemicals.

Extremely durable	**Maximum tightness**
High flow rate	**Compact design**



Electromotive Type 3320

- Safety position via energy storage
- Rapid flow shut-off
- Weather- and impact-resistant design
- Hygienically designed surface
- Versatile diagnostic options

ELECTROMOTIVE TYPE 3320

Electromotive 2/2-way angle seat valve (on/off valve)

This is the ideal valve when it comes to performing shut-off tasks under demanding usage conditions. The swivel plate is moved to the desired end position at up to 6 mm/s and reacts to process signals almost instantaneously. The actuator and valve are ideally matched in a closed, robust design. Type 3320 offers powerful functions for process monitoring, valve diagnostics and preventive maintenance.

Extremely fast, tight shut-off	**High impact and vibration resistance**
Numerous diagnostic options	**Extremely durable**

Globe valves

Top-class control characteristics | 2- or 3-way variants | Compact design | Long service life

This valve is the solution for many control tasks requiring precision and is therefore the standard in many industries. Bürkert's vision is to take this standard to a new level with a lightweight and ultra-compact body. The characteristic of the cone sets is an equal percentage characteristic as standard. Each port connection size has at least three different cone/seat sets to ensure the very best design to suit your application. These sets are interchangeable and are either metallic or soft-sealing. User-friendly tools are available online for configuration and design. Our consulting and support staff will be happy to assist you.

Control valve

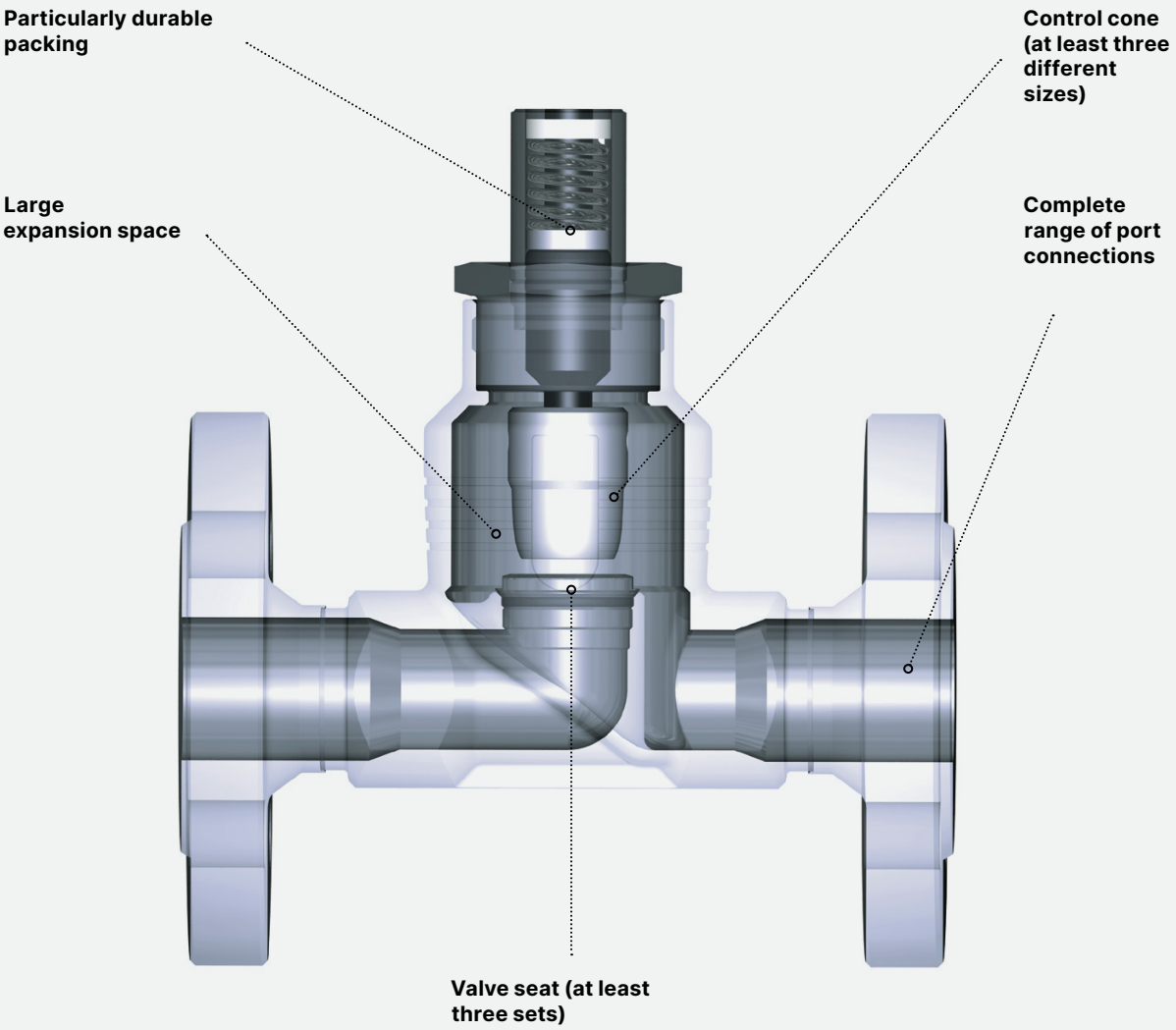

A compact alternative to many conventional pneumatically operated valves, this globe valve is particularly practical when space is limited or when flanges are required. It's a standard of quality that's typical of Bürkert: simply install, then forget!

On/off valve

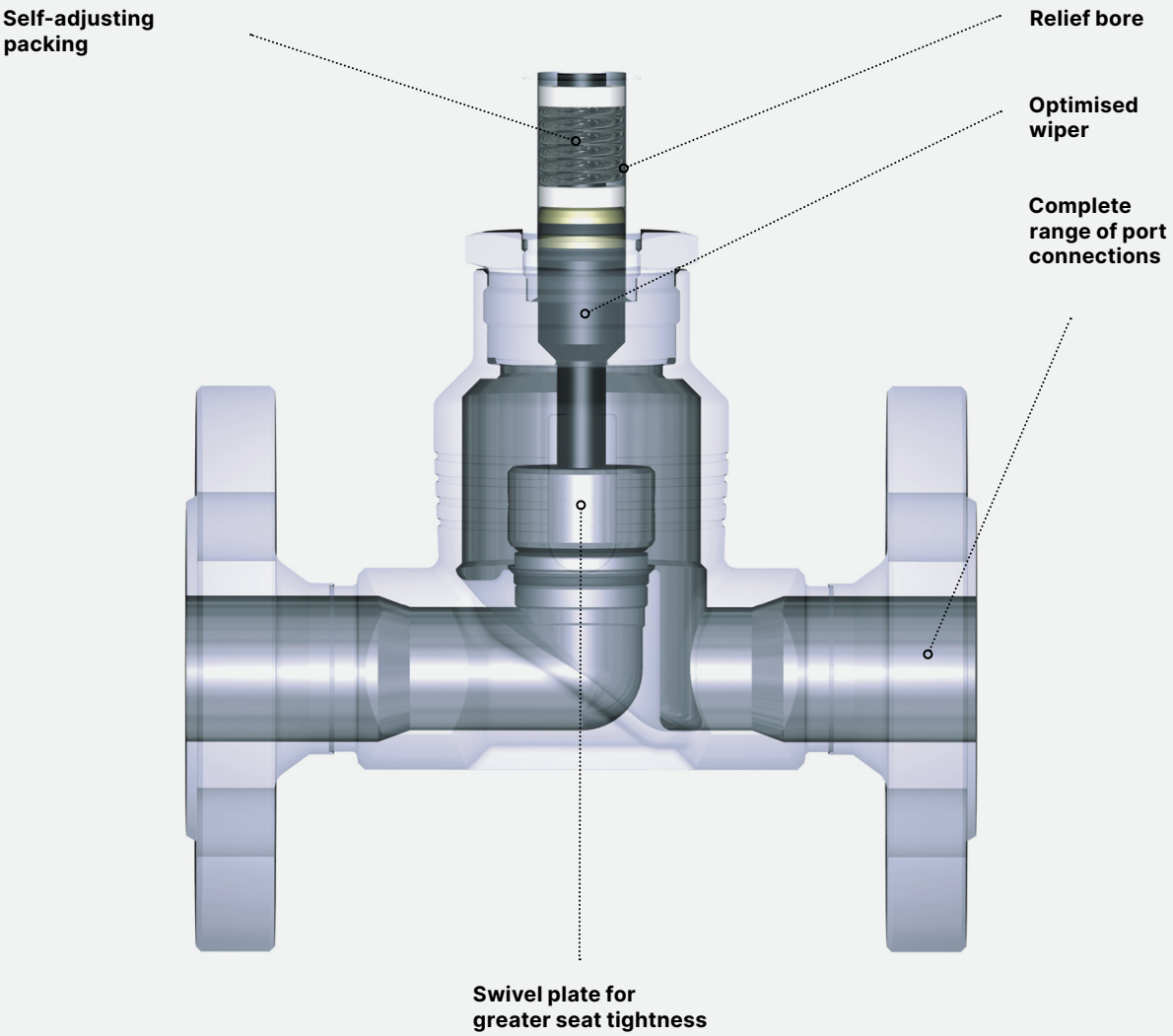

Globe control valves



Manual valve Type 2961

- Excellent control accuracy
- Exchangeable valve seats enable perfect coordination under the most demanding operating conditions
- Robust actuator with optional stroke limitation and locking
- Stainless steel valve body with flange, socket, clamp or welded connection

MANUAL VALVE TYPE 2961

Manually operated 2-way globe control valve

Flexible, reliable and tight control characterises the Type 2961. The valve combines the robust manual actuator with a globe valve body featuring exchangeable seats made of high-quality stainless steel. The valve body can be equipped with up to 8 valve seat sizes and reaches the desired flow characteristic curve in interaction with the parabolic cones.

Flexibly adjustable	**Robust and durable**
Highly precise control	**Even under demanding conditions**



ELEMENT Type 2301

- Excellent control accuracy
- Long service life and maintenance-free operation
- Flow-optimised body in stainless steel
- Several Kv values per port size due to removable valve seats
- Controller can be mounted directly without external tubing

ELEMENT TYPE 2301

Pneumatically operated 2-way globe control valve

The globe valve body can be equipped with up to five valve seat sizes. Unrivalled service life and tightness is guaranteed by the self-adjusting packing gland with exchangeable v-seals. Type 2301 offers a reliable and repeatable characteristic to vary the flow. The actuator design allows automation units to be integrated easily in all expansion stages.

Flexible thanks to several valve seat sizes	**Precise flow control**
Robust and durable	**Chemically resistant materials**



Electromotive Type 3361

- Highly precise, dynamic closed-loop control
- Several Kv values per port size due to removable valve seats
- Weather-, impact- and vibration-resistant design
- Easy to clean thanks to the hygienically designed surface
- Positioner and process controller available

ELECTROMOTIVE TYPE 3361

Electromotive 2-way globe control valve

Type 3361 is ideal for demanding control tasks, even under difficult usage conditions. The valve impresses with highly precise positioning of the control cone and an extremely fast positioning speed – which is almost instantaneous and individually adjustable. Pressure fluctuations or surges in the medium are not transferred to the valve position. The valve features many helpful functions for process monitoring, valve diagnostics and preventive maintenance.

Highly precise, dynamic closed-loop control	**Extremely fast shut-off (up to 6 mm/s)**
Flexibly adjustable (up to five valve seat sizes)	**Robust and durable**

Globe on/off valves



Manual valve Type 2921

- Compact design
- Long service life
- Robust actuator with optional stroke limitation and locking
- Stainless steel valve body with socket, clamp or welded connection

MANUAL VALVE TYPE 2921

Manually operated 2/2-way globe valve

Our Type 2921 valve is perfect for versatile shut-off tasks involving neutral and aggressive gaseous and liquid media. It consists of a robust manual actuator with position indicator and a 2-way valve body made of stainless steel. Thanks to the self-adjusting spindle seal, it is extremely tight and requires very little maintenance, even at high switching cycles. Soft seals made of PTFE or PEEK are available, as well as optional stroke limitation and locking functions.

Low maintenance	**Extremely robust and durable**
Maximum tightness	**Chemically resistant materials**



CLASSIC Type 2012

- Compact
- Long service life
- Robust actuators with modular accessory program
- Stainless steel valve body with flange, socket or welded connection

CLASSIC TYPE 2012

Pneumatically operated 2/2-way globe valve CLASSIC

The externally controlled globe valve consists of a pneumatically operated piston actuator and a 2/2-way globe valve body. The actuator is made from PA, or PPS for special operating conditions. The reliable, self-adjusting packing gland guarantees a high degree of tightness. The maintenance-free and robust Type 2012 valves can be retrofitted with a comprehensive range of accessories for position indication, stroke limitation or manual override.

Maximum tightness	**Extremely robust and durable**
No maintenance	**Comprehensive range of accessories**



ELEMENT Type 2101

- Compact design
- Long service life
- Easy integration of automation units with ELEMENT
- Stainless steel valve body with flange, socket or welded connection
- Suitable for steam

ELEMENT TYPE 2101

Pneumatically operated 2/2-way globe valve ELEMENT for decentralised automation

The unique design of our Type 2101 valve allows automation units to be integrated easily in all expansion stages – from electrical/visual position feedback to pneumatic control and an integrated fieldbus interface. The self-adjusting v-seal packing gland ensures maximum tightness. The highly integrated system meets protection classes IP65/67 and NEMA Type 4X.

Extremely durable	**Maximum tightness**
Chemically resistant materials	**Suitable for steam**



Electromotive Type 3321

- Safety position via energy storage
- Rapid flow shut-off
- Weather- and impact-resistant design
- Hygienically designed surface
- Versatile diagnostic options

ELECTROMOTIVE TYPE 3321

Electromotive 2/2-way globe valve (on/off valve)

Our innovative Type 3321 comes into its own under demanding conditions in particular. It closes rapidly at up to 6 mm/s, almost instantaneously. An optional energy storage device ensures safety in the event of a power failure. The closed design is highly robust and easy to clean. Protection class IP65/IP67 and high impact and vibration tolerance ensure the valve works perfectly even under harsh conditions.

Extremely fast, tight shut-off	**High impact and vibration resistance**
Numerous diagnostic options	**Durable**

Technology innovation

Tube valve body

The revolutionary valve body for diaphragm valves.

Diaphragm valves are key components in hygienic systems. Valves with cast and forged bodies are the standard solution in this area. Both have their own specific advantages, but also some weaknesses, including high weight, a difficult installation process, high carbon footprint and high thermal mass. Recognising these challenges and the need for a solution, Bürkert has developed the hydroformed tube valve body, which is revolutionising the diaphragm valve market.

- Innovative manufacturing technology
- Reduced material use
- Lightweight
- Faster heating & cooling



Did you know?

The tube valve body consists exclusively of a section of tube and a flange – both made of 1.4435 / 316L stainless steel. The secret lies in the tube, which is hydroformed and then joined to the flange by means of an external laser weld seam.

→ **www.burkert.com/TVB**

Energy savings	**Improved handling**
Reduced carbon footprint	**100% hygienic design**

Diaphragm valves

Body made of high-quality stainless steel for hygienic applications | Simple 2-way, T- or tank bottom valves up to customer-specific valve blocks | Plastic valve body for maximum chemical resistance

When liquids and gases are to be controlled separately in hygienically sensitive applications while taking strict regulatory requirements into account, diaphragm valves are the method of choice. The most important component for the safe separation of the medium and the other valve elements is the diaphragm.

Diaphragm valves play an essential role in safe and reliable production. To ensure sterile and contamination-free end products, it is important that you can rely on high-quality diaphragm valves that are specifically tailored to your needs. Thanks to our wide range of diaphragm valves, you will always find the right solution for your individual requirements.

Portfolio overview of diaphragm valves using the tube valve body



Diaphragm valve bodies

Wide range of diaphragm valves | Highest flow rates | Hygienic applications

When it comes to diaphragm valves, we have a lot to offer! In addition to a wide variety of different diaphragm bodies, the valves can be combined with proven Bürkert valve actuators, enabling the ideal diaphragm valve to be selected every time. The patented Robolux design also offers endless options that would not be possible with conventional diaphragm valves. The portfolio is complemented by various options for diaphragm materials and connections.

Full-way valve



T-valve



Tank bottom valve



Tandem valve



Block solutions



Robolux



Diaphragm control valves



ELEMENT Type 2103

- Valve body and diaphragm are available in various materials and variants
- Product wetted surfaces in Ra ≤ 0.38 µm...1.6 µm (optionally electropolished)
- Available in all common connection sizes and variants

ELEMENT TYPE 2103

2/2-way diaphragm valve with pneumatic stainless steel actuator (Type ELEMENT) for decentralised automation

Our externally controlled Type 2103 valve is ideally equipped for use under hygienic or aggressive conditions (protection classes IP65/67 and NEMA Type 4X). It consists of a pneumatically operated piston actuator, a diaphragm and a 2-way valve body. ELEMENT automation units can be retrofitted in all expansion stages. A fieldbus interface is available, as is an explosion-proof ATEX/IECEx device variant.

Hygienic construction	**High flow rates**
Chemically resistant materials	**Explosion-proof option available**



Electromotive Type 3363

- Safety position through energy storage
- Adjustable driving force
- Diagnostic functions and field-bus connection
- Product wetted surfaces in Ra ≤ 0.38 µm...1.6 µm (optionally electropolished)
- Available in nominal diameters DN 06...DN 100

ELECTROMOTIVE TYPE 3363

Electromotive 2-way diaphragm control valve

The valve consists of an electrically controlled linear actuator (positioner), a diaphragm and a 2-way valve body with high flow rates. The electric actuator provides rapid control at up to 4 mm/s. The position is indicated mechanically and with a 360° LED light ring. An optional energy storage device provides protection in the event of a power failure. The high IP65/IP67 protection and explosion protection according to ATEX/II 3G Ex ec IIC T4 Gc/II 3D Ex tc IIIC T135 °C Dc complete this outstanding picture.

Fast-acting at up to 4 mm/s	**Hygienic construction**
High flow rates	**Explosion protection**

Diaphragm on/off valves

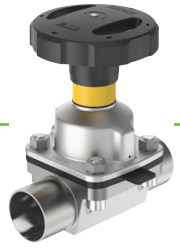

Manual Type 2933, 2973

- Valve body and diaphragm are available in different materials and versions
- Product wetted surfaces in Ra ≤ 0.38 µm...1.6 µm (optionally electropolished)
- Available in all common connection sizes and variants

MANUAL TYPE 2933, 2973

2/2-way diaphragm valve with manually operated actuator (basic/full function)

The Type 2933/2973 valves consist of a plastic handwheel, a diaphragm and a 2-way valve body, and ensure they can be used even under hygienic and aggressive conditions. The valve body and diaphragm are available in all common materials and versions. Visual position indicator, reproducible stroke scale and adjustable closing limiter complete the excellent features.

High flow rates	**Custom variants**
Perfect for difficult conditions	**Explosion-proof ATEX/ECEx variant available**



CLASSIC Type 2030, 2031

- Media-wetted surfaces in Ra ≤ 0.38 µm...1.6 µm (optionally electropolished)
- Diaphragm bonnet made of plastic or stainless steel
- Actuator in autoclavable design (PPS version)
- Option of stroke limitation

CLASSIC TYPE 2030, 2031

2/2-way diaphragm valve with pneumatic plastic actuator

The externally controlled Type 2030/2031 valve consists of a pneumatically operated piston actuator, a diaphragm and a 2-way valve body. It is ideal for hygienic or aggressive conditions and is characterised by high flow rates and a wide range of applications. Automation units 8690/8697 can be retrofitted in all expansion stages. The actuator is provided with an integrated visual position indicator as standard. The robust actuator of Type 2030 is also available in various plastic versions (PVC, PP, PVDF).

High flow rates	**Chemically resistant materials**
Custom material variants	**Explosion-proof option available**



Type 2063

- Valve body and diaphragm are available in various materials and variants
- Media wetted surfaces in Ra ≤ 0.38 µm...1.6 µm (optionally electropolished)
- Available in all common connection sizes and variants

CLASSIC TYPE 2063

2/2-way diaphragm valve with pneumatic actuator in stainless steel

The valve comprising a stainless steel piston actuator, a diaphragm and a 2-way valve body is ideal even for aggressive conditions. The actuator with visual position indicator, autoclavable design and large stainless steel casing features high temperature resistance. The seals are gap-free. Type 2063 is characterised by high flow rates and a wide range of applications. Type 8697 automation units can be retrofitted in all expansion stages.

Minimum dead space	**For hygienic/ aggressive conditions**
High flow rates	**High temperature resistance**



Electromotive Type 3323

- Safety position through energy storage
- Adjustable driving force
- Diagnostic functions and fieldbus connection
- Product wetted surfaces in Ra ≤ 0.38 µm...1.6 µm (optionally electropolished)
- Available in nominal diameters DN 06...DN 100

ELECTROMOTIVE TYPE 3323

Electromotive 2/2-way diaphragm control valve (on/off valve)

The externally controlled Type 3323 valve consists of an electrically controlled linear actuator (open/close), a diaphragm and a 2/2-way valve body, and is ideally suited to hygienic or aggressive ambient conditions. The actuator operates extremely quickly at up to 4 mm/s. The adjustable driving force protects the diaphragm. A 360° LED light ring and a mechanical position indicator show the position.

High flow rates	**Fast-acting up to 4 mm/s**
Position indicated via LED light ring	**Explosion-proof**

Bellows valves

Hygienic solution | Particularly suitable for filling applications | Ideal for dosing small quantities

Bürkert bellows valves are ideal for use in the pharmaceutical and food industries. An important advantage here is the safe separation of medium and actuator by the PTFE bellows. The durable bellows are also very easy to clean and sterilise, making them ideal for hygienic applications. In addition, the bellows are self-draining when installed correctly. Thanks to our extensive portfolio of port connections and Ex approvals, we can flexibly design the bellows in line with customer requirements.

Manual bellows valve



Type 3260

- Valve body and diaphragm are available in different materials and versions
- Product wetted surfaces in Ra ≤ 0.38 µm...1.6 µm (optionally electropolished)
- Available in all common connection sizes and variants

TYPE 3260

Bellows sampling valve

The Type 3260 bellows sampling valve is ideal for sampling in bioreactors and fermenters. It consists of a manually operated quick opening/closing mechanism, bellows and, depending on the version, a multi-way valve body. If the valve is not operated manually, it closes automatically. The valve is designed for use in hygienic or aggressive environmental conditions. A sampling port and SIP interface are integrated.

Automatic closing	**Hygienic**
Convenient	**Durable**

Bellows on/off valve



Type 2080

- Valve body and diaphragm are available in various materials and variants
- Product wetted surfaces in Ra ≤ 0.38 µm...1.6 µm (optionally electropolished)
- Available in all common connection sizes and variants

TYPE 2080

Pneumatically operated 2/2-way valve with bellows

With its short stroke, very high switching cycle rates and short switching times, this valve is ideal for filling applications, for example. It consists of a pneumatic piston actuator, a stainless steel valve body and a bellows element – for sealing the seat and hermetically sealing the media chamber. The valve can be equipped with different fittings and line connections. The actuator's range of functions can be expanded to meet specific requirements.

- **Fast switching**
- **Can be installed self-draining**
- **Easy to clean**
- **Explosion-proof ATEX/ ECEx variant available**

Bellows control valve



Type 2380

- Flow-optimised and zero dead space body
- Valve body and diaphragm are available in various materials and variants
- Product wetted surfaces in Ra ≤ 0.38 µm...1.6 µm (optionally electropolished)
- Available in all common connection sizes and variants
- Suitable for aggressive and corrosive media

TYPE 2380

Hygienic 2-way bellows control valve

The powerful, pneumatic Type 2380 valve is designed for hygienic or aggressive environments and masters demanding control tasks with smaller flow rates. The PTFE bellows separates the medium and actuator, thus increasing service life and reliability. The valve impresses with excellent response times. It can also be used in customer-specific block solutions such as Type 8880 pressure control systems.

- **Compact**
- **Fast-acting**
- **Suitable for even difficult conditions**
- **Easy to clean**

Further valve solutions



Type 2657

- Applications for aggressive media
- High flow rates
- Secured union nuts thanks to DualBlock® Technology

TYPE 2657

Ball valve, manually operated, plastic body

This type includes 2/2- and 3/2-way plastic manual ball valves for shutting off media flows. Various body designs and materials are available for a wide range of applications. One important special feature is that the ball valves are equipped with DualBlock® Technology. This system secures the union nuts and prevents them from coming loose during operation.

High flow rates	Secured union nuts
Suitable for use with aggressive media	Robust



Type 8805

- Pneumatic rotary actuator
- Precise end position adjustment
- High flow rates
- High media pressures
- Long service life

TYPE 8805

Ball valve / butterfly valve with pneumatic rotary actuator

The valve consists of a 90° quarter-turn valve (ball valve or butterfly valve) and a pneumatic rotary actuator. The rotary actuator is available as a single-acting or double-acting actuator. Type 8805 can be supplemented by adding a controller, positioner or process controller (Type 8791, 8792, 8793, 8691, 8692, 8693, 8694), pilot valve (Type 6519) or various position feedback indicators (Type 1061, 8691).

High flow rates	Suitable for high pressure
Durable	Comprehensive expansion options



Type 2674

- Manually operated / automatable
- Suitable for aggressive media
- Low torques
- Long service life
- Low maintenance

TYPE 2674

Plastic butterfly valve

The 2/2-way butterfly valve is ideal for control and shut-off applications. It can be combined with pneumatic (e.g. Type 2051 or 2052) and electric rotary actuators (e.g. Type 3003, 3004 or 3005) via the mechanical interface according to ISO 5211. It is also available in various materials: EPDM or FPM sleeve, PVC-U or PP-GR body, and PVC-U, PP-H, PVDF or PVC-C valve disc. This makes Type 2674 suitable for various types of media, including aggressive media.

- **Material variants for a wide range of requirements**
- **Low maintenance**
- **Automatable**
- **Durable**



Type 2671

- Manually operated / automatable
- High flow rates
- Stem and body are not in contact with the medium
- Low torques
- Zero leakage

TYPE 2671

Metal butterfly valves

The 2/2-way metal butterfly valve Type 2671 is ideal for shutting off and controlling media flows. It is available in various designs and materials and can therefore be used flexibly – for example, in the metal and paper industries and power plant technology as well as in mining, shipbuilding and mechanical engineering. The valves are characterised by low torque, an PFA-coated stem in the sealed area, blow-out protection and the notched handle in ductile iron that is lockable in 10 adjustable positions.

- **Material variants for a wide range of requirements**
- **Automatable**
- **High flow rates**
- **High level of tightness**

Control & communication

Overview

Bürkert offers a complete range of devices for controlling, monitoring, networking and decentralising process automation. Every component is the product of cross-functional mechanical and electrical development efforts, innovations and precise laboratory testing. Each individual component can be integrated into your automation strategy anytime and anywhere.



Position feedback indicators

Page 39



Control heads

Page 41



Positioners

Page 44



Process controllers

Page 48

Position feedback indicators

Safe | Flexible | Protected

Certainty that a valve has actually switched is very reassuring in many operating environments, but it is a fundamental requirement when controlling modern process plants. We have integrated switches into a wide variety of housings to cover as many operating environments as possible – from mechanical general-purpose switches to solutions for potentially explosive atmospheres.



Type 1060

- Fast and easy installation
- Compact design

TYPE 1060

Electrical position feedback indicator for pneumatically operated process valves

The Type 1060 electrical position feedback indicator is specially designed for integrated mounting on process valves from the CLASSIC series. Mounting the position feedback indicator on the valve is extremely easy due to its uncomplicated, highly compact design. Depending on the switch type, the position indicator electrically reports the positions – open or closed – with reliability.

Reliable position indication	**Compact**
Simple installation	**Versatile**



Type 8697

- Compact design
- Integrated pilot valve with manual override
- Integrated pilot air duct in the actuator
- Automatic end position feedback setting
- With ATEX II cat. 3G/D and cat. 2G/D approval

TYPE 8697

Pneumatic control unit for decentralised automation of process valves ELEMENT

Type 8697 is designed to control pneumatic process valves ELEMENT Type 21xx and is ideal for hygienic process technology. Mechanical or inductive limit switches register the valve position. By integrating pilot valves, Type 8697 can also be used as a control head. The device status is also displayed by LEDs on the control unit. The design permits an internal pilot air duct without external tubing. Together with ELEMENT actuators, spring chamber aeration is possible – to prevent contamination from outside.

Compact design	**LED status indicator**
Chemically resistant materials	**Easy to clean**



Type 8690

- Compact design
- Integrated pilot valve with manual override
- Integrated pilot air duct in the actuator
- Visual position indicator
- With ATEX II cat. 3G/D and cat. 2G/D approval

TYPE 8690

Pneumatic control unit for decentralised automation of process valves ELEMENT

Type 8690 is also designed to control pneumatic process valves ELEMENT Type 21xx. Its function and design advantages are the same as those found in Type 8697. By integrating pilot valves, Type 8690 can also be used as a control head. Focused on plant wash-down applications, the IP protection of the housing is supported by overpressure inside the control head. Overall, it is ideal for use in hygienic process technology – in the food and pharmaceutical industries, for example.

Compact design	**LED status indicator**
Chemically resistant materials	**Easy to clean**

Control heads

Modular | Networking | Teach function

A control head combines the advantages of a decentralised pilot valve directly on the process valve with the associated feedback function in a common body. As these are Bürkert's own standard products, we can offer the advantage of precise control over the quality of the components inside the device. Our many years of experience allow us to offer a suitable solution for every automation task. Choose between one, two or three pilot valves with mechanical, inductive proximity switches or the automatically learning inductive analogue sensor.

Core components of a control head

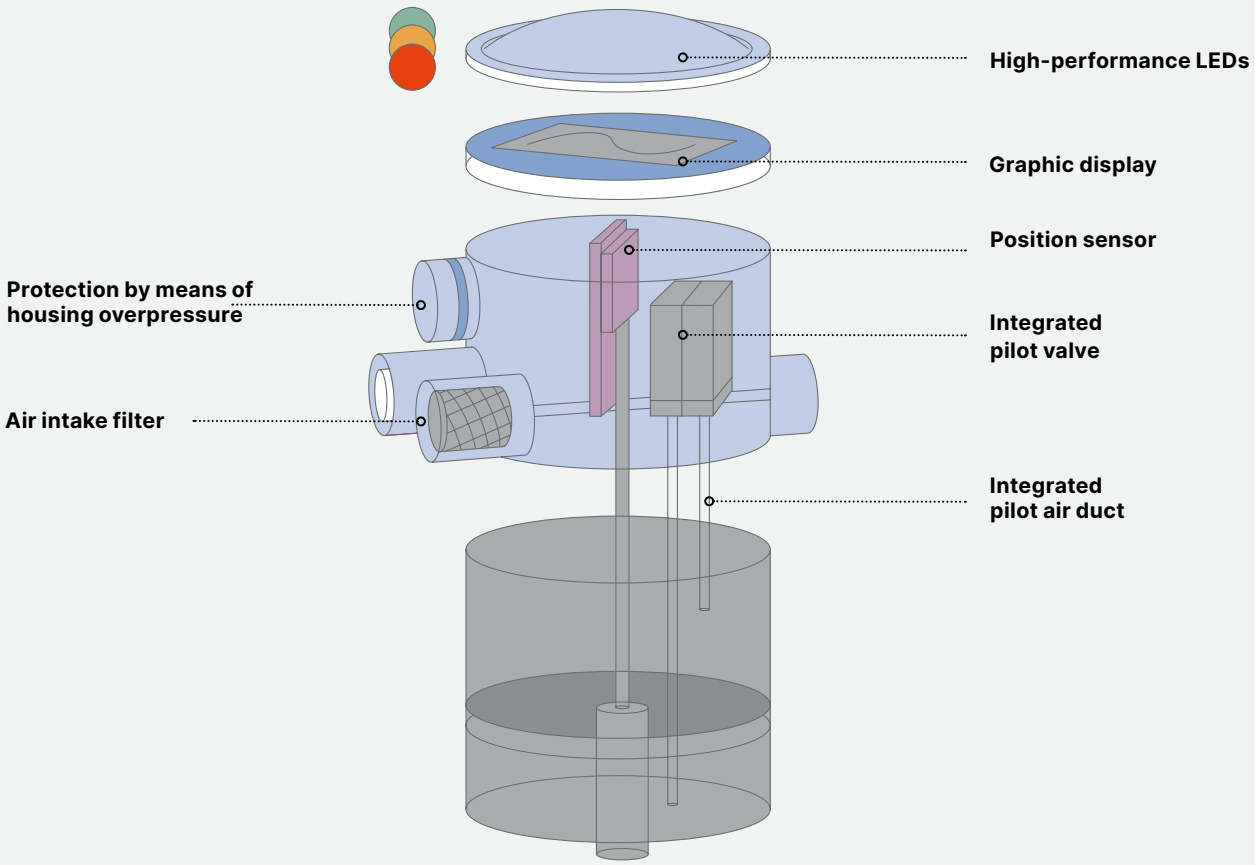



Type 8681

- Adaptable to commercially available hygienic valve actuators
- Contact-free inductive valve position registration (teach function)
- Colour illuminated status indicator
- Fieldbus interface: AS-Interface, IO-Link Port Class A & B

TYPE 8681

Control head for decentralised automation of hygienic process valves

Type 8681 handles all pneumatic control, feedback and diagnostic functions all the way to bus communication. The housing is easy to clean, offers IP protection and is resistant to chemicals, making it ideal for hygienic applications. Type 8681 can control up to three pneumatic actuator chambers. Up to three switching points can be set at the touch of a button using the teach function or determined automatically, and an additional switching point is possible. The check valve provides protection. The coloured status indicator provides comprehensive information.

- **Universal combination options**
- **AS-Interface, IO-Link Port Class A & B or büS**
- **Hygienic and IP protected**
- **Equipped with manual override**



Type 8695

- Contact-free inductive valve position registration (teach function)
- Colour illuminated status indicator
- Integrated pilot air duct in the actuator
- AS-Interface, IO-Link Port Class A & B, Bürkert system bus (büS)
- With ATEX II cat. 3G/D approval

TYPE 8695

Control head for decentralised automation of hygienic ELEMENT process valves

Designed for interaction with Type 21xx ELEMENT pneumatic process valves, especially with small nominal diameters. The valve position is registered via a contact-free sensor element – valve end positions are detected and saved using the teach function. The pilot valve controls single or double-acting actuators. The status is also indicated by coloured LEDs. The control head is ideally designed for hygienic process conditions. In combination with Bürkert ELEMENT actuators, spring chamber aeration becomes possible.

- **Contact-free position sensor**
- **Hygienic, with IP protection**
- **AS-Interface, IO-Link Port Class A & B or büS**
- **Chemically resistant materials**



Type 8691

- Contact-free inductive valve position registration (teach function)
- Colour illuminated status indicator
- Integrated pilot air duct in the actuator
- Fieldbus interface: AS-Interface, IO-Link Port Class A & B or Bürkert system bus (büS)
- With ATEX II cat. 3G/D/IECEx approval

TYPE 8691

Control head for decentralised automation of ELEMENT process valves

Designed to control ELEMENT Type 21xx process valves. The valve position is registered via a contact-free sensor element – valve end positions are detected and saved using the teach function. The pilot valve controls single or double-acting actuators. The status is also indicated by coloured LEDs. Focused on plant wash-down applications, the IP protection of the housing is supported by overpressure inside the control head. Together with Bürkert ELEMENT actuators, spring chamber aeration is possible.

Contact-free position sensor

Hygienic, with IP protection

AS-Interface, IO-Link Port Class A & B or büS

Chemically resistant materials

Positioners

With or without display | X.TUNE function | Precise

Precise and safe process control can be crucial for the reliability of the entire plant. Our comprehensive range of positioners gives you the most reliable process control imaginable. The positioners are user-friendly and offer a variety of unique features that can be configured individually to your needs and the application requirements.



Type 8696

- Compact stainless steel design
- Start-up with automatic X.TUNE function
- Contact-free position sensor
- Integrated pilot air duct in the actuator
- Digital communication IO-Link Port Class A & B, Bürkert system bus (büS)

TYPE 8696

Digital electropneumatic positioner for integrated mounting on process control valves

Type 8696 registers the valve spindle position without contact and displays the status via LED. An analogue position feedback can be optionally integrated. The controller is conveniently put into operation using the X.TUNE function and DIP switch, providing a sealing threshold, characteristic selection, inversion of direction and manual/automatic operating state switchover. The set-point value is specified via a standard signal of 4 to 20 mA. The linearisation of the characteristic can be carried out via a software interface.

Contact-free position sensor	**Easy start-up (X.TUNE)**
Compact design	**Robust stainless steel quality**



Type 8694

- Compact and robust stainless steel design
- Start-up with automatic X.TUNE function
- Contact-free position sensor
- Integrated pilot air duct in the actuator
- AS-Interface, IO-Link Port Class A & B or Bürkert system bus (büS)

TYPE 8694

Digital electropneumatic positioner for integrated mounting on process control valves

Type 8694 is put into operation using the X.TUNE function and DIP switch, providing a sealing threshold, characteristic selection, inversion of direction and manual/automatic operating state switchover. The set-point value is specified via a standard 4–20 mA signal or via AS-Interface. The position is registered without contact. Parameterisation can also be carried out via the DTM and the characteristic can be linearised via the software interface. LEDs indicate the status.

Contact-free position sensor	**Easy start-up (X.TUNE)**
Compact design	**Robust stainless steel quality**



Type 8692

- Compact and robust stainless steel design
- Easy start-up with automatic X.TUNE function
- Contact-free position sensor
- Integrated pilot air duct with spring chamber aeration
- EtherNet/IP, PROFINET, Modbus TCP, PROFIBUS DP-V1 or Bürkert system bus (büS)

TYPE 8692

Digital electropneumatic positioner for integrated mounting on process control valves

Our Type 8692 controller for actuators of the Type 23xx/2103 valve series is specially designed for hygienic process conditions, e.g. in the food, beverage and pharmaceutical industries. It is characterised by an integrated pilot air duct, IP protection, easy cleaning and chemical resistance. The controller is operated via its graphic display or via Bürkert Communicator. It registers the valve position without contact and without wear, and provides important diagnostic functions.

Contact-free position sensor	**Large graphic display**
Comprehensive diagnostic functions	**Hygienic, with IP protection**



Type 8791

- Compact and robust design
- Easy start-up using X.TUNE function
- Integrated diagnostic functions for valve monitoring
- Dynamic actuating system with no air consumption in controlled state
- IO-Link Port Class A & B, AS-Interface or Bürkert system bus (büS)

TYPE 8791

Digital electropneumatic positioner SideCONTROL

The controller is designed for single- and double-acting linear and rotary actuators with standardisation according to IEC 60534-6-1 or VDI/VDE 3845 (IEC 60534-6-2) – with the option also available for Bürkert process control valves. It is put into operation using the X.TUNE function and DIP switch, providing a sealing threshold, characteristic selection, inversion of direction and manual/automatic operating state switchover. The set-point value is specified via a standard 4–20 mA signal (optional: bus) and the device status is displayed via three coloured LEDs. It is also available as a remote variant (Type 8798).

Easy start-up (X.TUNE)	**Universally compatible**
No self-air consumption – 0 l/h	**Diagnostic functions**



Type 8792

- Compact and robust design
- Easy start-up using X.TUNE function
- Integrated diagnostic functions for valve monitoring
- Dynamic actuating system with no air consumption in controlled state
- EtherNet/IP, PROFINET, Modbus TCP, PROFIBUS DP-V1 or Bürkert system bus (büS)

TYPE 8792

Digital electropneumatic positioner SideCONTROL

The controller is designed for mounting on single- and double-acting linear and rotary actuators with standardisation according to IEC 60534-6-1 or VDI/VDE 3845 (IEC 60534-6-2), and – with a remote position sensor – can also be used to control Bürkert process control valves. The controller can optionally be equipped with a fieldbus interface. It is operated via the graphic display and provides numerous diagnostic functions – for planned maintenance and high plant availability.

Easy start-up (X.TUNE)	**Universally compatible**
No self-air consumption – 0 l/h	**BOOSTER.ready**

Product innovation

Manufacturer-independent valve automation

Universal adaptation of automation units to commercially available valve actuators.

Thanks to universal, standardised adapters, our Bürkert automation units automate not only Bürkert valves, but also other commercially available valves, completely independently of the manufacturer.

As a customer, you can choose between standardised and customised adapters. Smooth operation is ensured by the fact that the functionality is checked and complete documentation is provided.

Some of the important advantages of manufacturer independence are that you benefit from uniform procedures during start-up as well as consistency during live operation and with respect to diagnostic functions. You also simplify asset management and streamline your purchasing processes and spare parts inventory, among other aspects.

- Wide selection of adapters
- Tested functionality
- Complete documentation
- Standardised valve automation

Visit our eShop

→ **Type KK01**



Did you know?

With universal Type KK01 adapters for Bürkert automation units, you can standardise the automation and digitalisation of your valves, regardless of the valve manufacturer. This opens up valuable new freedom and efficiency potential for you.

Standardised digitalisation

Increased flexibility

Improved process reliability

Increased efficiency

Process controllers

ProcessTUNE function | Integrated PID controller | Graphic display

Bürkert is a pioneer in the field of decentralised, valve -coupled process control. Cross-competence innovation at the interface between control electronics and mechanical precision has led to a range of outstanding, decentralised automation solutions that make your life easier! What's more, each solution can replace several components from the traditional control loop and is easy to install and configure.

Process variables such as temperature, pressure, flow or fill level are crucial in the process engineering process. The actual value is determined during operation using a suitable sensor in the process and compared with the set-point value. Depending on the magnitude and direction of the deviation, the process controller calculates the set-point value for the positioner's control loop. The process variable is then influenced by opening or closing the valve. The continuous measurement of the process actual value and its comparison with the set-point value minimises the deviation between the two values that needs to be regulated. The control loop type can be detected and the corresponding controller structure in the process controller can be selected very easily and automatically using ProcessTUNE (P.TUNE). The optimum parameters are calculated at the same time. In particular, this makes the often complex task of starting up control loops easier.

Sectional view of process valve system

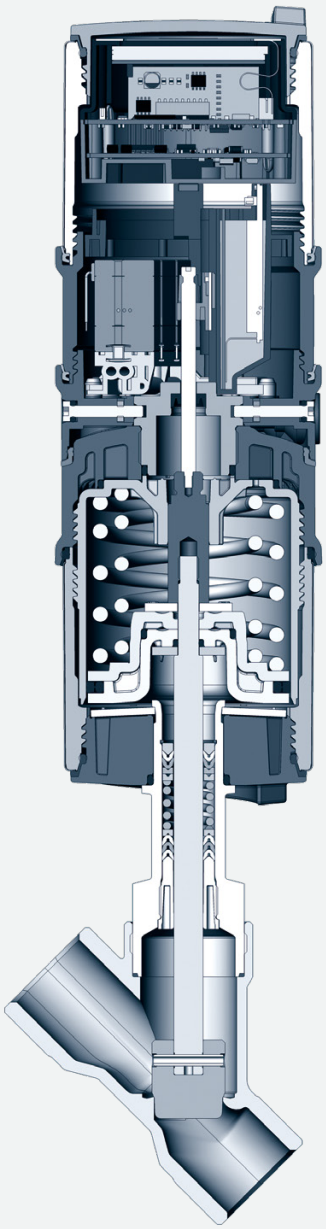



Type 8693

- Compact and robust stainless steel design
- Easy start-up via TUNE function for positioner and process controller
- Contact-free position sensor
- Integrated pilot air duct with spring chamber aeration
- PROFIBUS DP-V1, EtherNet/IP, PROFINET, Modbus TCP or büS (Bürkert system bus)

TYPE 8693

Digital electropneumatic process controller for integrated mounting on process control valves

Type 8693 is designed for single- or double-acting pneumatic actuators of the Type 23xx/2103 process control valve series. The graphic display ensures convenient operation. The controller registers the valve position without contact and without wear. The actual value of the process variable is supplied directly to the device as a 4–20 mA, PT100 or frequency signal, from which the set-point value for the subordinated positioner is calculated.

Various communication interfaces available

Easy start-up (X.TUNE & P.TUNE)

For hygienic conditions

Comprehensive diagnostic functions included



Type 8793

- Compact and robust design
- Start-up via the TUNE function of the positioner and process controller
- Integrated diagnostic functions for valve monitoring
- Dynamic actuating system with no air consumption in controlled state
- EtherNet/IP, PROFINET, Modbus TCP, PROFIBUS DP-V1 or Bürkert system bus (büS)

TYPE 8793

Digital electropneumatic process controller SideCONTROL

The controller is designed for single- and double-acting linear and rotary actuators according to IEC 60534-6-1 or VDI/VDE 3845 (IEC 60534-6-2) – and, as an option, for Bürkert process control valves. It is operated via the graphic display/Bürkert Communicator, automatically parameterised via P.TUNE and X.TUNE and is open to all common current and voltage standard signals. The process controller calculates the position set-point value for the subordinated positioner via variance comparison. Comprehensive diagnostic functions are included.

Easy start-up (X.TUNE & P.TUNE)

Universally compatible

No self-air consumption – 0 l/h

Diagnostic functions

ELEMENT process valve systems at a glance

On/off

To meet all of our customers' individual requirements, we have an extensive product portfolio of on/off process valves with integrated control heads or economical pneumatic control units. Their compact and lightweight design with fully integrated automation functionality represents a decisive advantage. In addition, they are designed and optimised for decentralised process automation.

Type 8801

Combination options for the individual 8801 components

Automation units



Type 8691
Control head



Type 8695
Control head



Type 8690
Pneumatic control unit



Type 8697
Pneumatic control unit / position feedback indicator

Actuators



ELEMENT actuator

Valve body



Angle seat body



Globe body



Diaphragm body

Example combinations



Control

To keep your work running smoothly, Bürkert provides you with a perfectly coordinated system: our control valves have an integrated positioner or process controller that ensures functional reliability, a long actuator service life and consistently high control accuracy. The system is known for its optimum control precision and its unique ELEMENT design with integrated pilot air duct. The independence from external tubing ensures simple and safe installation.

Type 8802

Combination options for the individual 8802 components

Automation units



Type 8692 Positioner



Type 8693 Process controller



Type 8694 Positioner



Type 8696 Positioner

Actuators



ELEMENT actuator

Valve body



Angle seat body



Globe body



Diaphragm body

Example combinations



Bürkert Fluid Control Systems

EXPERTS IN PROCESS VALVES

- We have been successfully fulfilling all fluidic require-ments for over 75 years
- Tens of thousands of satisfied OEMs, end customers and plant engineers trust process valve solutions from Bürkert
- Intelligent automation solutions available for all applications
- Innovative, holistic solutions for the challenges of today – and tomorrow

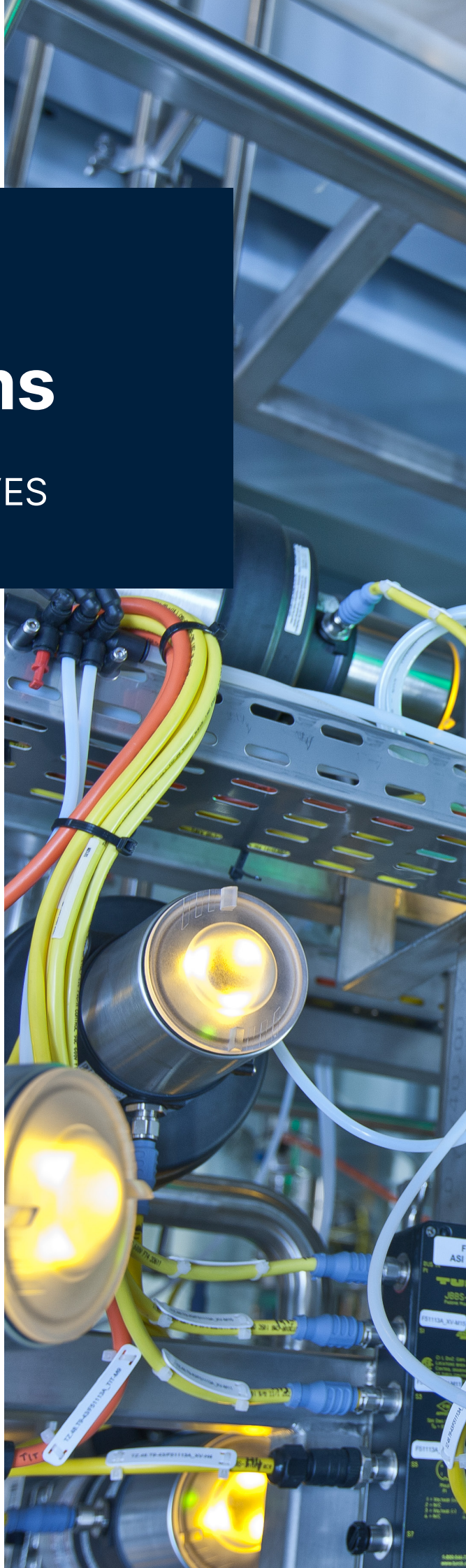



Customisation & development

THE BÜRKERT SYSTEMHAUS FACILITIES ARE RESPONSIBLE FOR THE EFFICIENT, INNOVATIVE AND COST-EFFECTIVE DEVELOPMENT OF YOUR FLUIDIC SOLUTIONS





Our state-of-the-art Systemhaus facilities specialise in developing fluidic assemblies and solutions according to your precise requirements. A motivated and dedicated team of sales consultants, industry specialists and engineers will work hand in hand to make your project a success – with every aspect of the process under one roof! All of our production infrastructure is located on site, which allows us to respond quickly and flexibly. This combination and concentration of expertise and resources in one place translates into huge gains in efficiency and quality for you.

Why choose Bürkert as your solution partner?

- Interdisciplinary collaboration between Bürkert experts ensures seamless communication and prevents loss of information – for exceptionally efficient processes
- All process steps, ranging from development, prototype assembly and tool construction through to production, take place in one location – for fast-paced development and seamless quality
- We don't think in terms of narrowly defined industry contexts; we are always exploring new possibilities with regard to handling liquids and gases – for new, original solutions that surpass the standards in your industry
- We will use suitable system platforms for your individual solution – for a short time to market and significant cost savings

With our extensive capacity and full range of services, we will take responsibility for as much of the development process as you want us to and will coordinate all interfaces in order to provide pioneering, integrated solutions.

→ Bürkert Systemhaus

Automation & digitalisation

FLEXIBLE, NEUTRAL, COMPLETE: OUR APPROACH TO FIND THE BEST SOLUTION



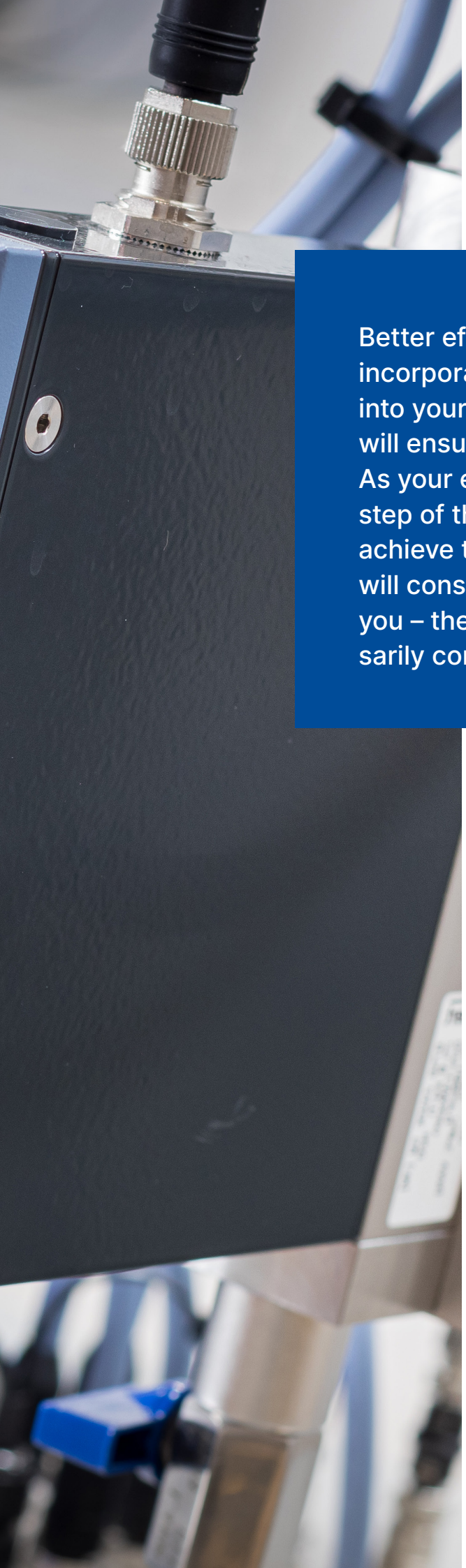

Better efficiency, quality and cost-effectiveness: incorporating optimised automation and digitalisation into your processes, applications and fluidic challenges will ensure that you stay ahead of the competition. As your expert partner, Bürkert will support you every step of the way. Our priority is to make sure you achieve the best possible results. This means that we will consider different manufacturers when advising you – the components we recommend won't necessarily come from us.

Why choose Bürkert as your solution partner?

- We understand your processes, applications and challenges – and will use these insights to develop automation solutions perfectly tailored to your tasks
- Our advice is neutral and objective – which gives us the freedom to truly find the perfect solution for you
- Our experts will use innovative approaches and select creative solutions to keep you one step ahead of the competition
- Unlike other partners, we are not just here to supply components – we will work with you to ensure your success by means of a complete automation and digitalisation concept
- If you wish, we can take care of the concept, planning and implementation – all from a single source. You won't have to worry about interfaces, compatibility or fine tuning

When it comes to finding the best solution, we always give 100% – whether you want to assign individual subtasks to us or entrust us with the entire automation and digitalisation process from initial advice right through to start-up.

Accessories: diaphragms

Our diaphragms have been developed to meet strict hygienic and sterile requirements. Bürkert diaphragms are available in a wide range of materials that have been tried and tested for use in the food and beverage industry, biotechnology and the pharmaceutical and cosmetics industry. The diaphragms are tested during development and production in order to ensure reliability under difficult process conditions. If you would like more help in choosing the right components, get in touch with us. We will be happy to provide specific advice.

Type SV01

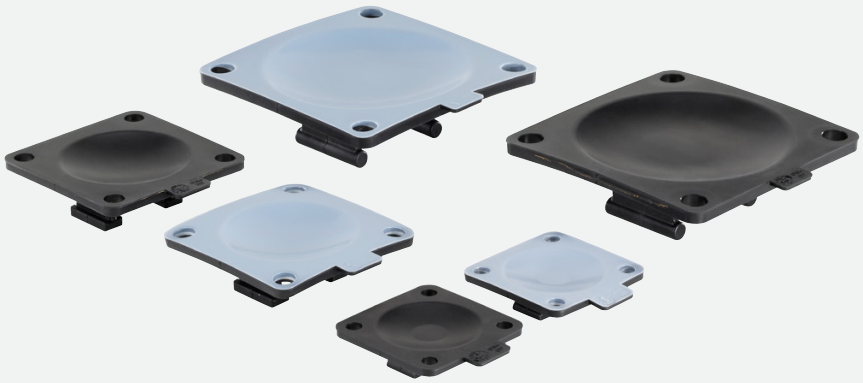

Type SV02



Bürkert eShop

Click here to go to the Bürkert eShop!

Your benefits at a glance:

- 24/7 availability of the eShop
- Documents such as data sheets, CAD drawings, operating instructions and EU declarations of conformity always at hand
- View current prices, conditions, delivery times and stock levels at any time
- Download and track orders, delivery notes and invoices at any time
- Create shopping lists and save shopping carts
- Order common items via quick order

Discover these and many other advantages in our Bürkert eShop!



02/2025

Bürkert Fluid Control Systems
Christian-Bürkert-Strasse 13–17
74653 Ingelfingen
Germany

Telephone: +49 7940 10 0
info@burkert.com

burkert.com

bürkert
FLUID CONTROL SYSTEMS