DISTRIBUTED BY:

Holland
APPLIED TECHNOLOGIES



Proportional valves

Product range overview

Pioneers of Flow.

bürkert
FLUID CONTROL SYSTEMS

Contents

Complete range from a single source 4

Product range 6

Design and function of proportional valves 8

Solenoid control valves 9

Precision and dynamics with electromagnetic valves 9
Functionality 10
Products 12

Motor-driven proportional valves 16

Functionality 16
Energy efficiency and robustness with motor-actuated valves 18
Products 19

Control of solenoid control valves 22

Functionality 22
Typical functions of control electronics 23
Products 24

Parameters of proportional valve technology 26

Sizing of proportional valves 27

Quick guide 28

Product innovation 29

Customisation & development 30

Automation & digitalisation 32

Bürkert eShop 35

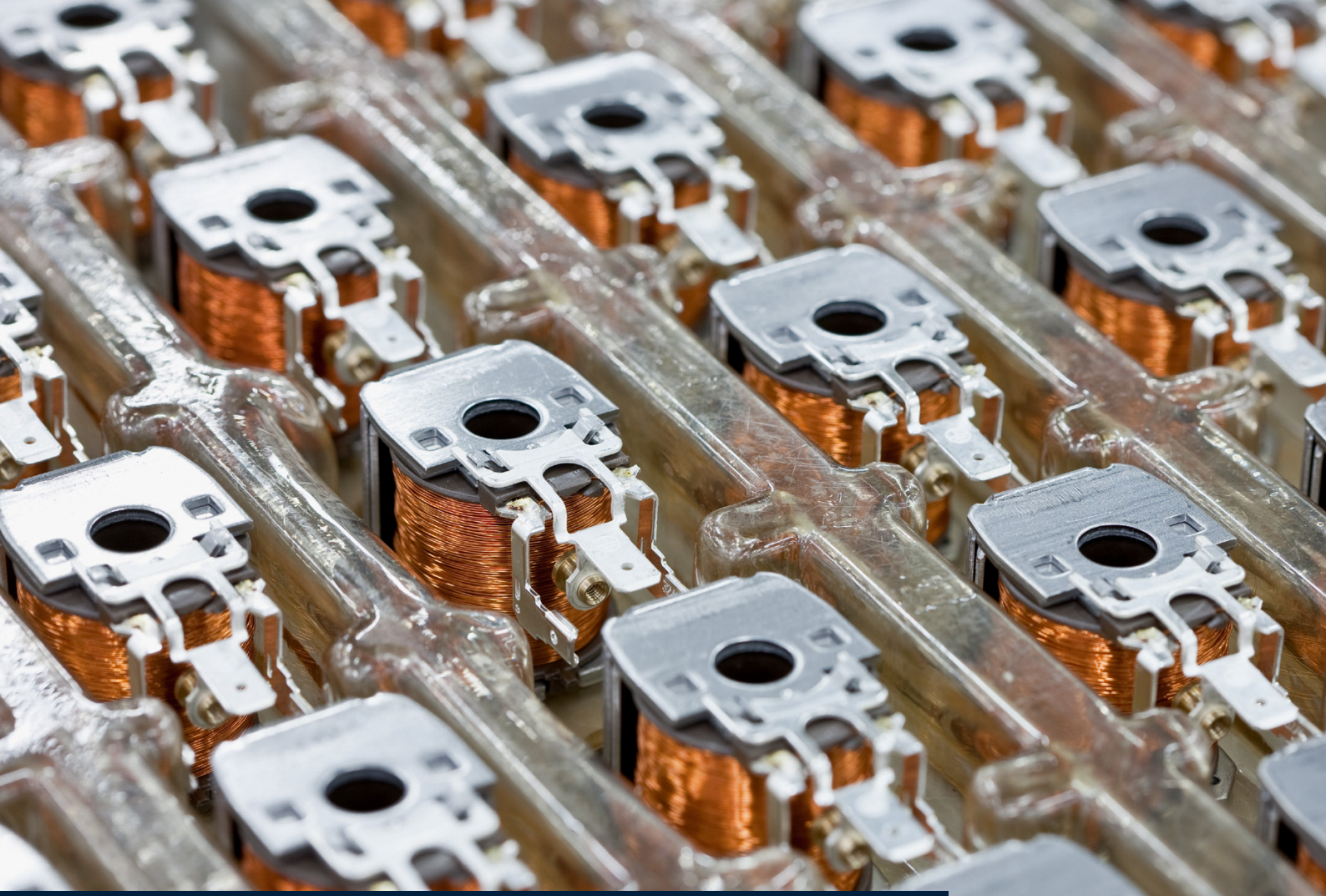

Why Bürkert is your partner

When liquids or gases need to be measured, controlled and regulated with precision, Bürkert is by your side. Our proportional valves have been used for decades in every situation where reliability matters – from CO_2 control devices in minimally invasive medicine to natural gas and oxygen control in burner systems, and even hydrogen technologies and compressor technology.

What sets us apart is our technological expertise, innovative concepts, intelligent design and flexible material combinations. This allows us to tailor every valve and every combination precisely to your requirements – for durable, efficient and perfectly fitting solutions you can rely on.

Complete range from a single source

Vertical integration with know-how

We offer you the complete range of services – from selecting the right product to consulting, design and completion, right through to commissioning. Benefit from our expertise in production and development. Our qualified engineers are continuously working on optimising fluidics. Thanks to our high level of vertical integration, we can respond flexibly to specific customer requirements and produce components quickly and independently.

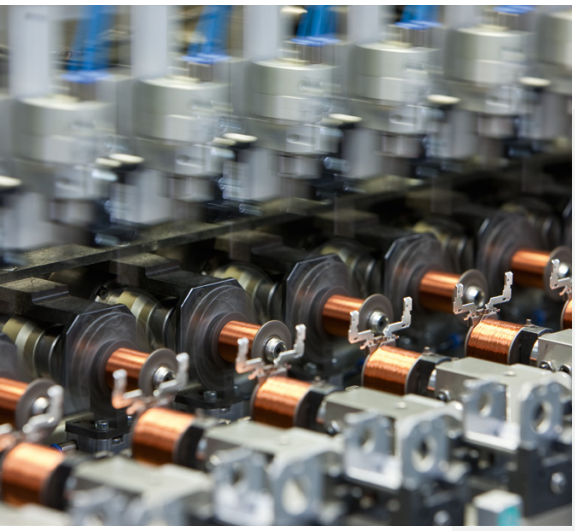

Solenoid manufacturing

Reliable quality through in-house production

In Gerabronn, we manufacture our solenoids ourselves – from winding to testing. This ensures consistently high quality and traceability. Our machines process wires thinner than a hair, with windings up to 4 km in length. Depending on requirements, various encapsulating materials are used. Each step is followed by an automatic test. We also produce custom designs in terms of power and voltage – tailored precisely to your valve.



Mechanical production

Precision in metal and plastic – directly at Bürkert

At our Criesbach location, we process metals and plastics by milling, turning, welding, forming and injection moulding. For applications in medicine and analytics, we use suitable materials to ensure surface quality and durability. Complex shapes are created directly in our own tool shop – quickly, flexibly and precisely tailored to your requirements.



Guaranteed quality

Every component tested – every valve ready for use

Before series production begins, we test products intensively – according to standards and specific requirements. Our UL laboratory has been accredited since 2014. Production begins after approval. Solenoids and fully assembled valves undergo complete electrical and mechanical testing. This ensures that every valve delivered is ready for immediate use.



Dust-free environment

Clean installation for sensitive applications

Sensitive applications require clean conditions.
We assemble in separate, filtered areas with minimal particle contamination. Specialised workplaces and cleaning procedures are available for additional requirements such as oil or grease-free surfaces. This is how we ensure the reliable functioning of our valves – even under special purity requirements.



Expert consultation

Individual performance – even beyond the product

Whether you need a single valve or a complex application, we provide personalised advice tailored to your specific needs. Thanks to our experience, modular product range and close coordination between development and production, we'll find the right solution together. We also support you with comprehensive services to make your processes more efficient in the long term.

Product range

Electromagnetic proportional valves

				
Type	**2861**	**2871**	**2863**	**2873**
Operating principle	Plunger directly on valve seat (NC*), direct-acting			
Design feature	Sliding rings	Low-friction plunger guide	Sliding rings	Low-friction plunger guide
Solenoid size	20 mm	20 mm	32 mm	32 mm
Seal material	EPDM, FKM	EPDM, FKM, FFKM	EPDM, FKM, FFKM	EPDM, FKM, FFKM
Media	Neutral gases, liquids on request			
Port connection	Threaded flange	Threaded flange	Threaded flange	Threaded flange
Power consumption	5 W	2–5 W	9 W	9 W
Nominal diameters [1)]	0.8–2 mm	0.05–2 mm	0.8–6 mm	0.8–6 mm
Repeatability	< 1% of full scale	< 0.25% of full scale	< 1% of full scale	< 0.5% of full scale
Sensitivity	< 1% of full scale	<0.1% of full scale at DN < 0.8 mm <0.25% of full scale	< 1% of full scale	< 0.25% of full scale
Turn-down ratio	1:25	1:200: DN 0.08 to 2 mm 1:500: DN 0.05 to 0.6 mm	1:25	1:200
Response time	<15 ms	<15 ms	<20 ms	<20 ms

Remark: Characteristic data of control behaviour depends on process conditions.

* NC = normally closed

[1)] Within a type, the following generally applies: the larger the nominal diameter, the lower the maximum sealed inlet pressure

				
2865	**2875**	**7021**	**6020**	**6223**
Plunger directly on valve seat (NC*), direct-acting				Plunger on servo piston (NC*)
Sliding rings	Low-friction plunger guide	Sliding rings	Sliding rings	Pilot-operated
49 mm	49 mm	24 mm	32–42 mm	32–42 mm
FKM, EPDM	FKM, EPDM	EPDM	EPDM, FKM	FKM
Neutral gases, liquids on request			Neutral gases, liquids on request, optimised for hydrogen	Neutral liquids
Threaded flange	Threaded flange	Thread, push-in	Cartridge, flange	Thread
16 W	16 W	5–7 W	7–18 W	8–16 W
2–8 mm	2–9.5 mm	0.8–2.7 mm	0.8–8 mm	10–20 mm
< 1% of full scale	< 0.5% of full scale	< 1% of full scale	< 1% of full scale	< 1% of full scale
< 1% of full scale	< 0.25% of full scale	< 1% of full scale	< 1% of full scale	< 1% of full scale
1:25	1:200	1:25	1:100	1:10
<25 ms	<25 ms	<15 ms	<25 ms	<200 ms

Design and function of proportional valves

A proportional valve reacts quickly and precisely, while also offering exceptional repeatability. Unlike traditional shut-off valves, which can only be open or closed, a proportional valve controls the flow rate value continuously. The seat opening of the valve opens and closes in proportion to the electrical control signal. This means that, when a proportional valve is being controlled with current, for example, a higher current intensity at the valve inlet leads to a higher flow rate at the valve outlet.

For this reason, proportional valves are ideal for applications in which mass or volume flows may change.
They can be found in electronic devices as well as in mechanical and plant engineering.

Various actuator types

- Electromagnetic
- Electromotive
- Piezoelectric
- Pneumatic

Bürkert provides electromagnetic and electromotive proportional valves for the most compact control and fluidics solutions possible.

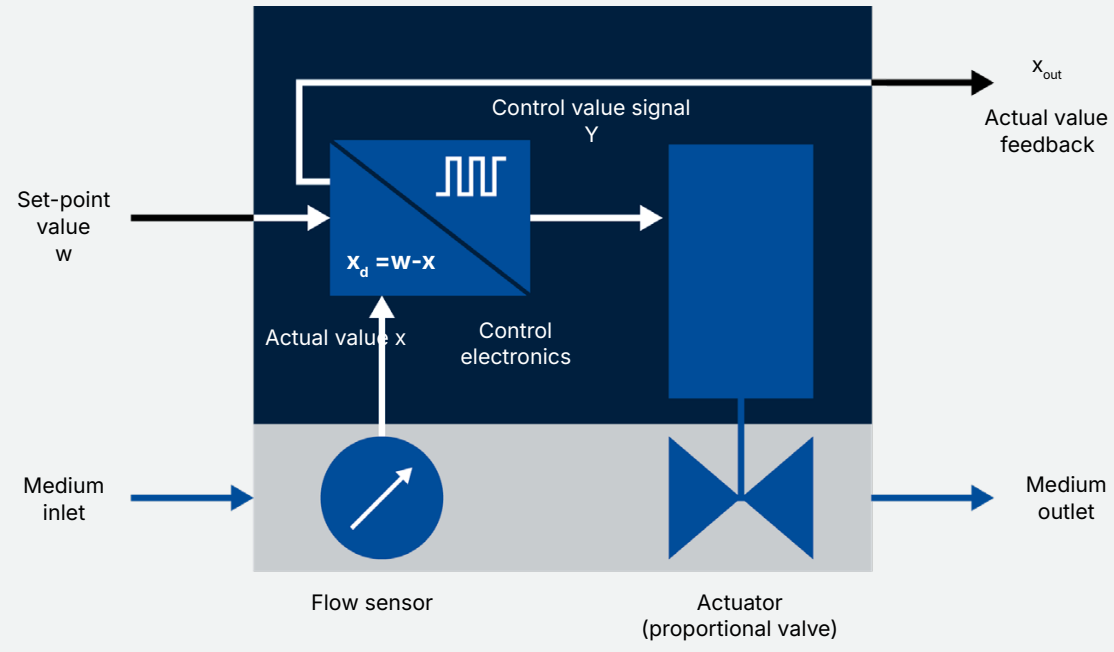

Fig. 1: Schematic diagram of the closed control circuit with an integrated proportional valve as an actuator

Precision and dynamics with electromagnetic valves

Feature	Advantage
Direct-acting plunger design	Compact design, very fast response times
Epoxy resin-moulded solenoid, tight encapsulation of the valve system	High protection class (IP65), safety, higher temperature ranges
Low-friction guidance of the valve plunger	Excellent repeatability, very good sensitivity, high measuring span
PWM control	Lower hysteresis, avoidance of static friction
Seat seal integrated into valve plunger	Sealing function, no additional shut-off valve necessary

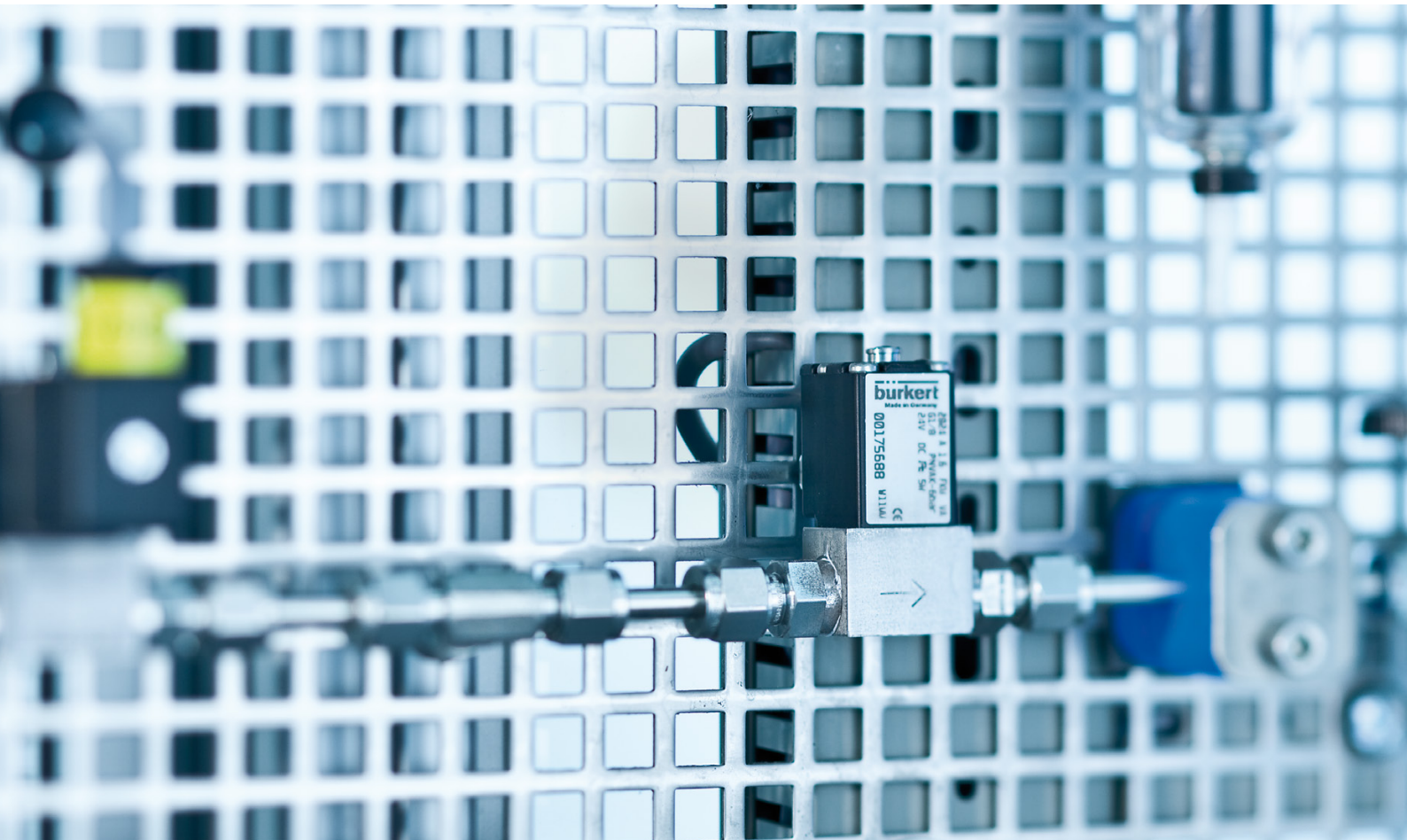

Solenoid control valves

In general, solenoid control valves are direct-acting plunger valves. The spring force and the magnetic force act against each other in this case. When the power is off, the spring presses the plunger onto the valve seat, keeping the valve closed. If electric current passes through the solenoid, magnetism is generated, which lifts the plunger and opens the valve. More information on the function of plunger valves can be found in the product range overview for solenoid valves.

Special design features in proportional valves ensure that a balance between the magnetic force and spring force is established for every adjustable current. This allows different plunger positions to be set across the entire current range without the need to measure them. The possible current range is set via a special control unit and depends, among other things, on the pressure conditions.

In the case of direct-acting proportional valves, the flow direction is below the seat. The medium (fluid) which flows in from below presses – together with the generated magnetic force – against the clamping force of the return spring pressing from above. For this reason alone, it is advisable to set the minimum and maximum flow rate value of the operating range (solenoid current) under operating conditions. Bürkert proportional valves are closed when de-energised (NC, normally closed).

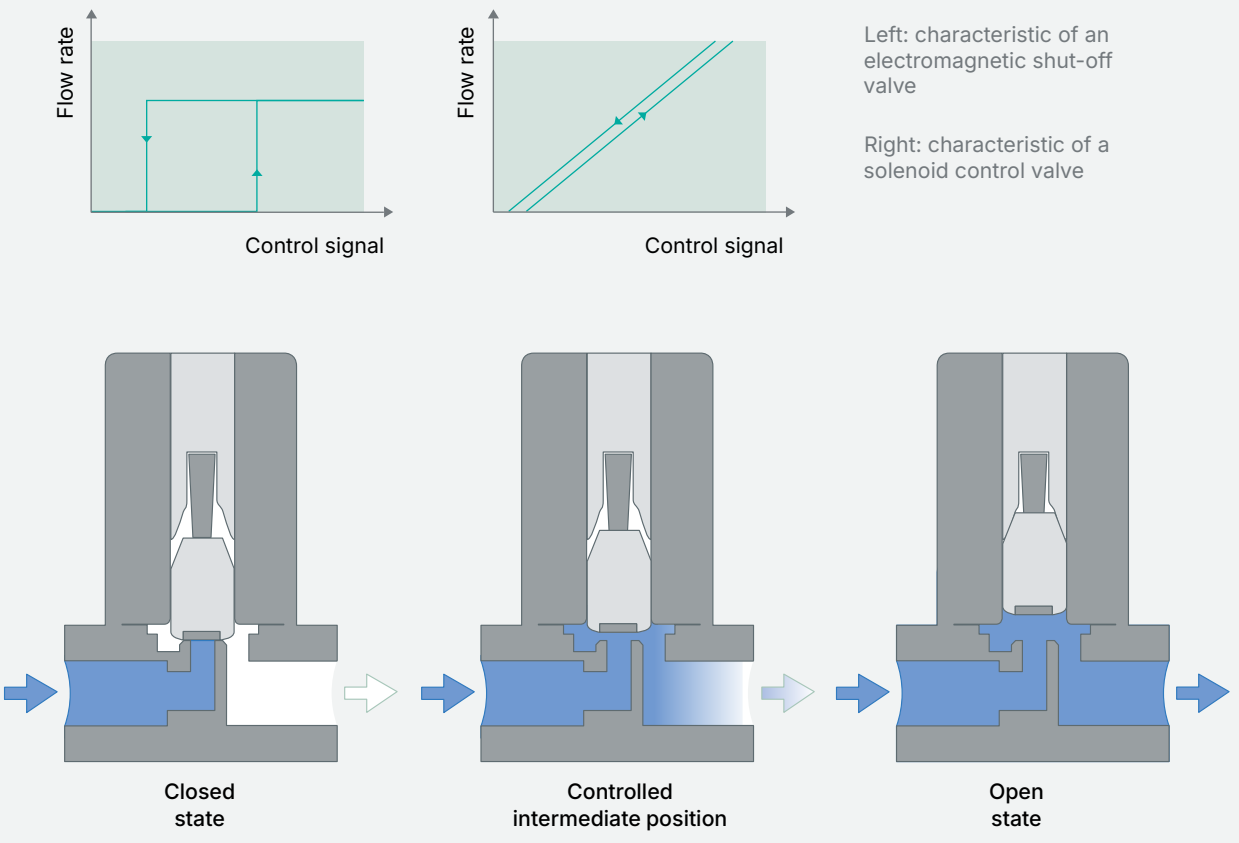

Fig. 2: Functional principle of direct-acting proportional solenoid valves

With a flat stopper geometry, the magnetic force drops so sharply as the working air gap increases that it becomes impossible to produce continuous positioning behaviour. Both components need a specific shape in order to achieve states of equilibrium between the spring force and magnetic force. This may involve, for example, a conical transition area design in the outer part of the stopper and an almost mirror-imaged slant design in the upper part of the plunger (see the conical design geometry in Fig. 3).

When there is no power, the valve closes solely by means of spring force. A seal at the valve seat prevents any fluid escaping from the closed valve.

The better the plunger is guided and moved within the solenoid, the more pronounced the sensitivity will be and the more repeatable process value control will be. In addition to magnetic force and spring force, there is a third force that is unavoidable but whose consequences are undesirable: friction force. Friction disturbs the positioning behaviour. However, it can be avoided by using precise plunger guidance and special control electronics. For this reason, proportional valves are ideal actuators in a closed control circuit.

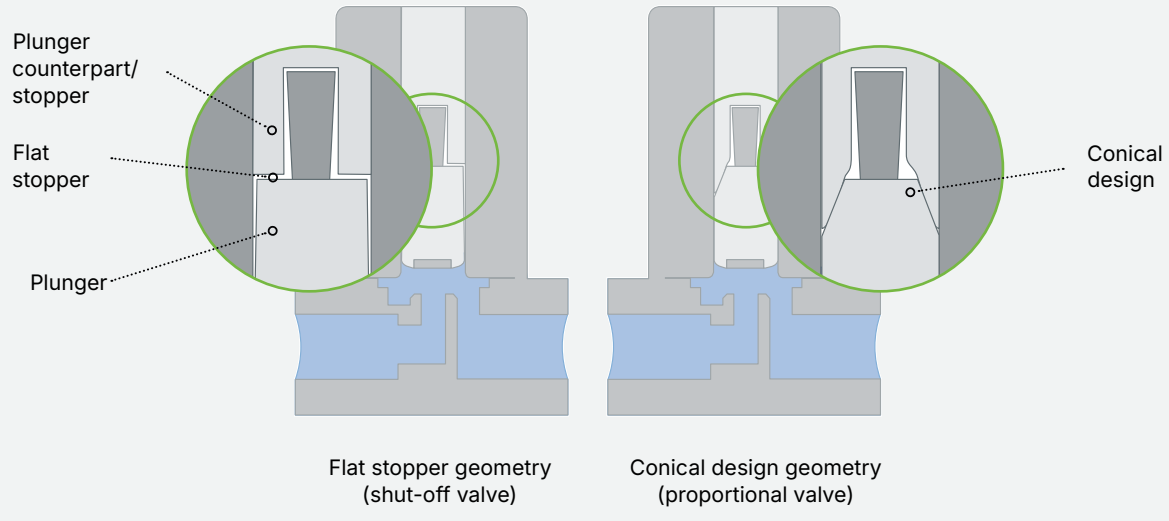

Fig. 3: Comparison of flat stopper and conical design

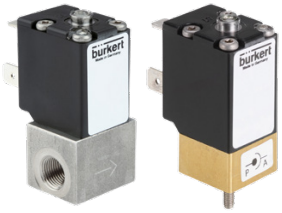

Type 2861/2871

- Nominal diameter:
  Type 2861: DN 0.8 to 2.0 mm
  Type 2871: DN 0.05 to 2.0 mm
- Pressure range:
  Type 2861: vacuum, 0 to 12 bar
  Type 2871: vacuum, 0 to 12 bar
- Valve materials:
  brass, stainless steel
- Seal materials:
  EPDM, FKM, FFKM
- Connection:
  1/8″ thread, flange

TYPE 2861/2871

Direct-acting 2-way standard proportional valves

The valves in the 2871 and 2861 series are primarily used in analytical and medical devices, in pharmaceutical process engineering and in metal treatment applications. They make it possible to control process gases with exceptional repeatability and ensure stable mixing ratios. In addition to the proportional control function in closed control circuits, the valves also offer reliable shut-off of process gases with a high level of tightness thanks to an integrated seat seal. This makes it possible to combine precise control tasks and reliable shut-off functions in a single device. Type 2871 offers maximum precision for even the most demanding control tasks, while Type 2861 represents a compromise between performance and cost-effectiveness.

Good to excellent turn-down ratio, depending on type	**Very good response characteristics and highly compact continuous valve design**
Suitable for oxygen as well as fuel gas applications	**Approval/conformities for use in the food sector as well as USP Class VI and UL (Type 2871)**



Type 2863/2873

- Nominal diameter:
  Type 2863: DN 0.8 to 6.0 mm
  Type 2873: DN 0.8 to 6.0 mm
- Pressure range:
  Type 2863: vacuum, 0 to 16 bar
  Type 2873: vacuum, 0 to 16 bar
- Valve materials:
  brass, stainless steel
- Seal materials:
  EPDM, FKM, FFKM
- Connection:
  1/8″ and 1/4″ thread, flange

TYPE 2863/2873

Direct-acting 2-way standard proportional valves

Type 2863 and Type 2873 are the more powerful variants within the product range. Due to their larger design, they provide more actuating force and can therefore shut off reliably or perform precise proportional control at higher operating pressures – a clear advantage over Type 2861/2871. Thanks to their robust design, the valves are ideally suited to applications with high back pressures. Although they are larger than pressure-relieved valves, they operate significantly more reliably at pressures above 5 bar and still maintain stable, precise control of the set-point value. At the same time, Type 2873 performs impressively even in gas applications with very low operating pressures. As a result, the valves cover an exceptionally wide range of applications and ensure excellent process reliability across the entire pressure spectrum.

Good to excellent turn-down ratio, depending on type	**Compact continuous valve design**
Optional: explosion-proof solenoid	**Approval/conformities for use in the food sector as well as USP Class VI and UL (Type 2873).**



Type 2865/2875

- Nominal diameter:
  Type 2865: DN 2.0 to 8 mm
  Type 2875: DN 2.0 to 9.5 mm
- Pressure range:
  Type 2865: 0 to 25 bar
  Type 2875: 0 to 25 bar
- Valve materials:
  brass, stainless steel
- Seal materials:
  EPDM, FKM
- Connection:
  3/8″ and 1/2″ thread, flange

TYPE 2865/2875

Direct-acting 2-way standard proportional valves

Type 2865 and Type 2875 proportional valves are the largest designs in the entire series and allow for the highest operating pressures as well as the largest nominal diameters in the standard range. They are particularly resistant to high back pressures, making them ideal for demanding industrial processes.

Typical fields of application are found in plant engineering – especially water treatment – and in hydrogen technologies and compressor technology. Thanks to their state of function and robustness, they represent an efficient alternative to large motor or pneumatic valves – while at the same time ensuring precise, stable proportional control even in large-volume systems.

- **Good to excellent turn-down ratio (depending on type)**
- **Compact continuous valve design**
- **High dynamics and very good response characteristics**
- **Optional: explosion-proof solenoid**



Type 6223

- Nominal diameter: DN 10 to 20 mm
- Valve material: brass
- Seal material: FKM
- Pressure range: 0 to 10 bar
- Connection: thread

TYPE 6223

Pilot-operated 2-way proportional valve for high flow rates

The Type 6223 valve can be used as an actuator for controlling large liquid volumes. The nominal diameter range extends up to DN20 while maintaining a compact design. Even in the DN20 nominal diameter range, up to 10 bar of inlet pressure can be applied and controlled. Typically, this valve is used in cooling processes in the semiconductor, metal and plastics industries.

- **Continuous valve for continuous control of liquids**
- **Tight-closing valve**
- **Compact design**
- **High flow rate (Kv value)**



Type 6020

- Nominal diameter: DN 0.8 to 8 mm
- Valve materials: stainless steel
- Seal materials: EPDM, FKM
- Pressure range: 0 to 30 bar
- Connection: cartridge, thread & flange

TYPE 6020

Direct-acting 2-way proportional valve

The Type 6020 direct-acting proportional valve can be used as an actuator for closed-loop process control, typically for automatic set-point value control of flow rate or pressure values. Due to an elastomeric seat seal, the valve closes tight up to the orifice size-specific nominal pressure (integrated shut-off function). This valve is particularly suitable for use with gases such as hydrogen, oxygen or fuel gases. Compared to conventional proportional valves, the valve can be operated at higher supply pressures. Cartridge and flange connections, and solenoids with automotive plugs with degree of protection IP6K9K, are available for optimised use in fuel cell systems.

Integrated shut-off function with reliably high tightness

Excellent response characteristics and extensive turn-down ratio

Available as flange or cartridge variant for quick system integration

Degree of protection IP65 or IP6K9K with automotive plug



Type 7021

- Nominal diameter: DN 0.8 mm; 1.6 mm; 2.7 mm
- Valve material: PPS
- Seal material: EPDM
- Pressure range: 0 to 12 bar
- Connection: push-in, thread & flange

TYPE 7021

Direct-acting 2-way proportional valve

Type 7021 is a direct-acting solenoid control valve for controlling neutral media. It is available with a nominal diameter of up to 2.7 mm. The choice of materials and the valve design ensure reliable operation and a long service life, even in steam applications. Push-in fittings made of PPS are available for port connection. The valve can be fastened and maintained quickly thanks to the optionally available Quick-Clip brackets and/or screw fittings. The valve range includes approvals and conformities in accordance with EC Regulation 1935/2004, FDA and NSF 169.

Approvals/ conformities for use in the food sector

Suitable for steam applications

Excellent response characteristics and extensive turn-down ratio

User-friendly integration into process line via push-in connections

Motor-driven proportional valves

Integrated stepper motors are at the heart of electromotive proportional valves from Bürkert. There are two different versions of the actuator to suit the nominal diameter (for valve designs, see Fig. 5).
In both cases, the valve fitting has been optimised for a high flow coefficient.

The seat valve covers the nominal diameter range of 2 to 6 mm. A linear stepper motor transmits its stroke movement to the control cone via a coupling. In the closed state, the control cone presses on the valve seat and can be lifted gradually, allowing it to control the flow rate. In the case of the seat valve, the flow direction is below the valve seat. The disc valve is used for nominal diameters of 8 to 25 mm.

The rotary movement of a geared stepper motor is transmitted to the actuator shaft via a coupling. Connected to the shaft is a sealing disc that can be rotated by 180°. This presses on a specially designed ceramic seat. Through the rotation of the sealing disc, the flow rate can be varied proportionally in relation to the rotary movement. In the case of the disc valve, the flow direction is below the valve seat.

For both variants of the motor-actuated proportional valves, the last position reached is maintained with minimal energy consumption when there is no power.

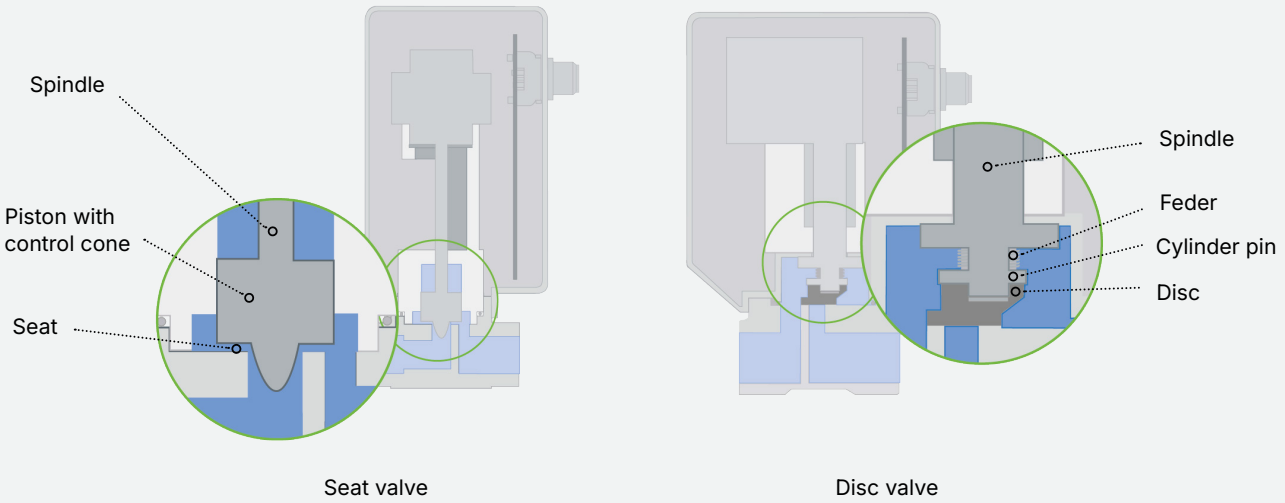

Fig. 5: Seat valve/disc valve comparison

There are three different expansion stages for the motor valves:
- Standard version for analogue signals with end position detection
- Positioner variant for fieldbus communication with position sensor
- Process controller variant based on positioner with additional sensor signal input

All versions feature integrated control electronics. The electronics integrated in the valve make commissioning much easier as no additional control unit is required.

The motor only requires current during positioning and holding power is virtually eliminated, giving motor valves a key advantage over solenoid valves. As soon as the valve has reached the required opening, the motor switches off and therefore no longer consumes power.

In Fig. 6, the energy consumption of an electromagnetic valve and an electromotive proportional valve was compared as an example: both valves were opened and closed gradually at defined intervals. The area under the graphs represents the energy required in each case. This makes it clear that, in applications that do not require highly dynamic control, significant energy savings can be achieved with motor valves.

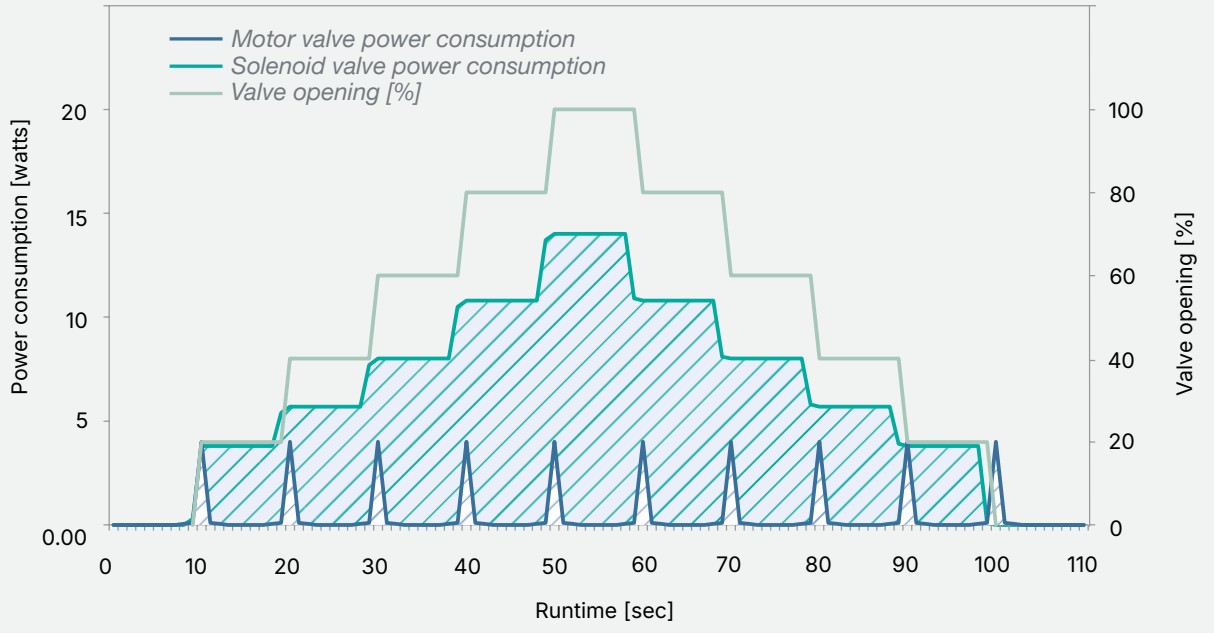

Fig. 6: Power consumption of a motor valve compared to a solenoid valve with an identical orifice.

Energy efficiency and robustness with motor-actuated valves

Feature	Advantage
Media-separated, direct-acting design	Suitable for corrosive media, compact design
Precise stepper motor as actuator	High dynamics for motor valves, extensive turn-down ratio
Self-locking design of the actuator element	No holding energy required for position maintenance, not sensitive to resonances in the process
Integrated control electronics	No additional electronics necessary
Status LED and position detection	Valve state and valve position immediately visible, valve openings can be controlled in a targeted manner

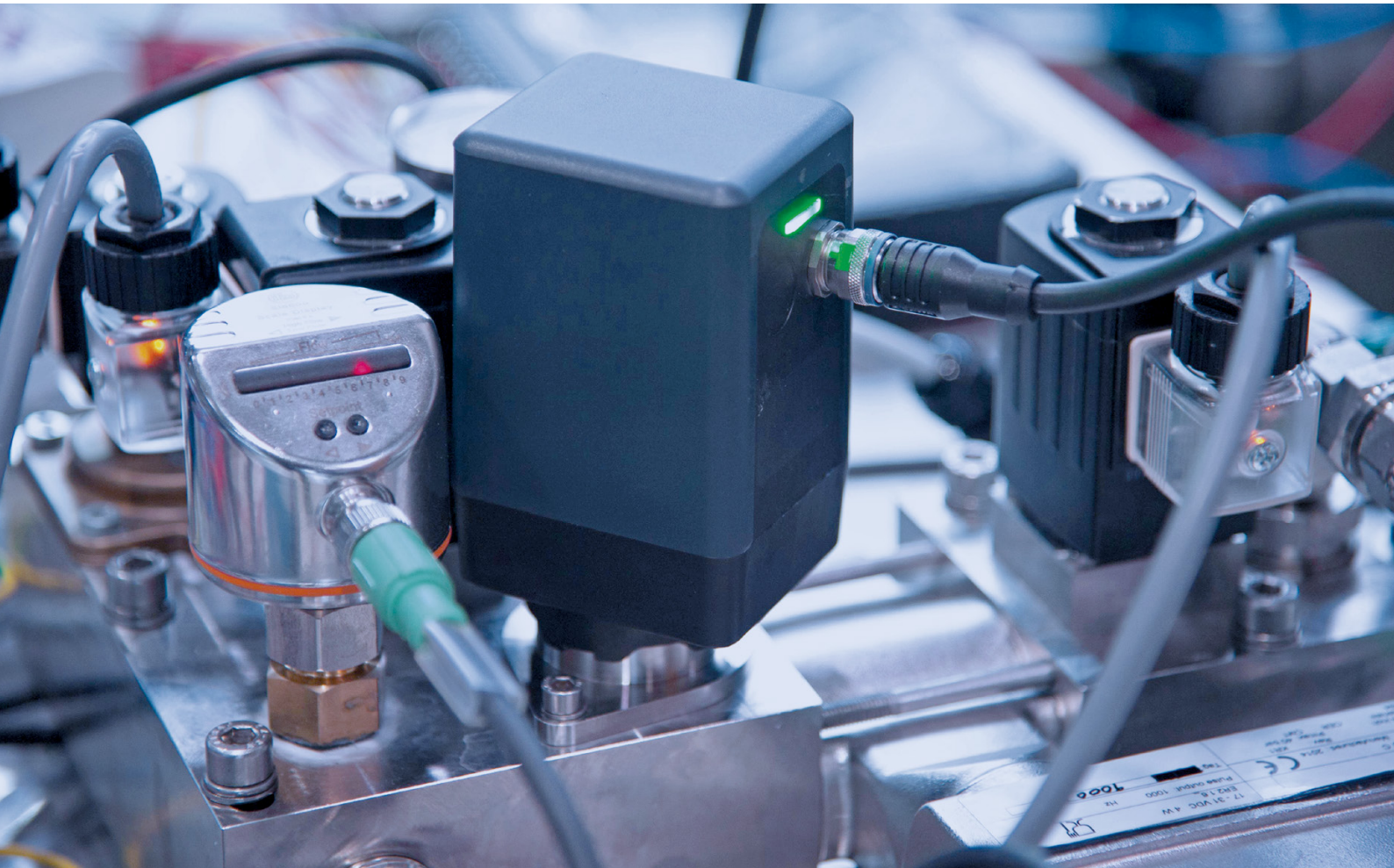



Type 3280

- Actuator is isolated from flow path
- Excellent turn-down ratio and fast reaction time
- Low electrical power consumption
- Nominal diameter DN 8 to 15 mm | Kvs value 0.03 to 1.9 m³/h
- Variants: standard, positioner, process controller; and high-pressure variants for up to 22 bar

TYPE 3280

Electromotive 2-way globe proportional valve

The direct-acting Type 3280 motor valve is suitable for dosing liquids and gases in closed or open control circuits. The valve is driven by a linear stepper motor. The integrated electronics simplify process integration; additional actuation modules are not necessary. The motor does not require any energy to keep a particular valve open. This feature can reduce the energy consumption of a plant dramatically and therefore make it more efficient. Type 3280 is available as an ON/OFF valve or proportional valve as standard, as a variant with an integrated positioner, and as a variant with an integrated process controller.

Conformities and approvals according to cURus, FDA, oxygen	**Vibration-free due to pressure-stable, self-locking actuator**
High-precision flow control by means of an integrated position sensor	**Modular configuration options based on numerous body variants**



Type 3281

- Actuator is isolated from flow path
- Excellent turn-down ratio and fast reaction time
- Nominal diameter DN 15 mm | Kvs value 0.57 to 4.55 m³/h
- Medium temperature up to +130 °C
- Variants: positioner, process controller

TYPE 3281

Electromotive 2-way proportional valve

The direct-acting motor valve Type 3281 is particularly suitable for dosing liquids and gases in closed or open control circuits. The valve is driven by a linear stepper motor. The integrated electronics simplify process integration; additional actuation modules are not necessary. The motor does not require any energy to keep a particular valve open. This feature can reduce the energy consumption of a plant dramatically and therefore make it more efficient. Type 3281 is available as a variant with an integrated positioner, as well as a variant with an integrated process controller.

Conformity according to EC Regulation 1935/2004 and Chinese GB standards for food	**Vibration-free due to pressure-stable, self-locking actuator**
High-precision flow control by means of an integrated position sensor	**Modular configuration options based on numerous body variants**



Type 3285

- Actuator is isolated from flow path
- Excellent turn-down ratio and fast reaction time
- Low electrical power consumption
- Nominal diameter DN 15 to 25 mm | Kvs value 1.8 to 9.6 m³/h
- Variants: standard, positioner, process controller

TYPE 3285

Electromotive 2-way globe proportional valve

The direct-acting Type 3285 motor valve is suitable for dosing liquids and gases in closed or open control circuits. The valve is driven by a stepper motor. The integrated electronics simplify process integration; additional actuation modules are not necessary. The motor does not require any energy to keep a particular valve open. This feature can reduce the energy consumption of a plant dramatically and therefore make it more efficient. Type 3285 is available as an ON/OFF valve or proportional valve as standard, as a variant with an integrated positioner, and as a variant with an integrated process controller.

Conformities and approvals according to cURus, oxygen, hydrogen	**Vibration-free due to pressure-stable, self-locking actuator**
High-precision flow control by means of an integrated position sensor	**High flow rates with a compact design**



Type 3290

- Maximum process reliability thanks to a pressure-stable, self-locking actuator
- Protection class IP65 – highly resistant to dust and water
- Analogue and digital communication interfaces (including IO-Link, CANopen, etc.)
- Extended media temperatures up to +165 °C
- Integrated control electronics: Open/Close, positioner and process controller

TYPE 3290

Electromotive 2-way proportional valve

Type 3290 is the new generation of electromotive proportional valves and delivers impressive performance with its excellent process reliability, efficiency and robustness. The pressure-stable, self-locking actuator ensures vibration-free operation even in the event of pressure surges. The integrated control electronics allow for simple installation as well as flexible 360° mounting. Thanks to the modular platform concept, a wide range of body and connection variants are available for different media. IO-Link enables central diagnostics and process data, while the intelligent motor control and increased duty cycle ensure reliable, long-lasting use even under demanding conditions.

Conformities and approvals according to EC Regulation 1935/2004, FDA, oxygen, drinking water	**Intelligent motor control for maximum process reliability**
Digital communication interface with IO-Link	**Modular configuration options based on numerous body variants**


Bürkert

Control of solenoid control valves

In principle, it is possible to control the proportional solenoid with variable DC voltage.
However, static friction can occur more readily at the guide points of the plunger. The sensitivity suffers as a result and leads to more significant hysteresis effects. To prevent static friction, the standard input signal is converted using special control electronics – usually into a pulse-width-modulated square-wave voltage signal (PWM control; see Fig. 4). This type of control initiates a very fast, but low-amplitude oscillation movement in the plunger. Despite the oscillation – and precisely because of it – the equilibrium position of the plunger is maintained, as is its permanent sliding friction. Otherwise, the oscillation movement of the plunger has no influence whatsoever on the flow behaviour of the fluid.

In the case of PWM control, the effective magnetic current is set via the duty cycle of the square-wave signal when there is a constant supply voltage. The PWM frequency is aligned with not only the natural frequency and damping of the spring-core system, but also the inductance of the magnetic circuit. If the duty cycle t_1/T increases (t1: activation time, T: period duration, f=1/T: frequency), the effective solenoid current I also increases. This is because the pulse width of the square-wave signal has increased. If, on the other hand, the duty cycle decreases, the effective solenoid current is also reduced.

In general, small solenoids (such as those in Type 2871) with low magnetic force react sensitively to higher frequencies. At low frequencies, they generate movement amplitudes that are too large and an unnecessarily high noise level. Large solenoids with high magnetic force (such as those in Type 2875), on the other hand, only lead to dither movements at low frequencies and thus a reduction in static friction.

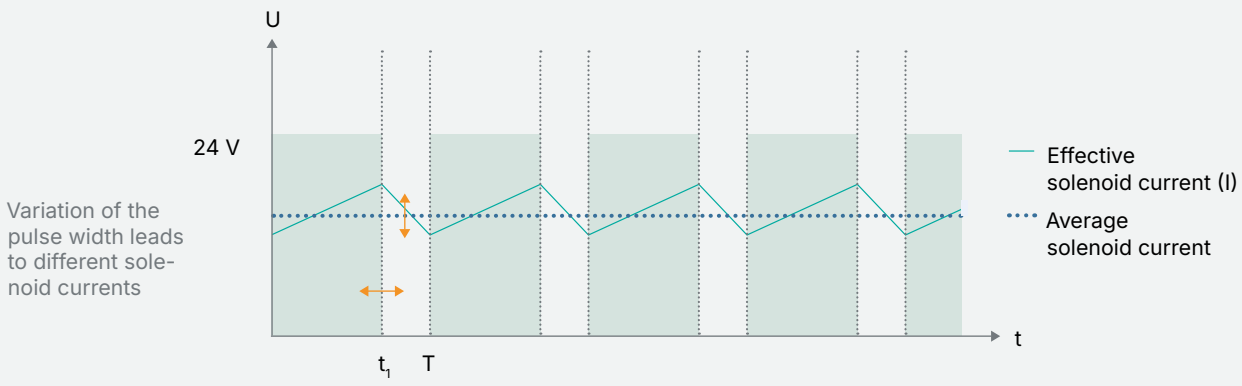

Fig. 4: PWM control signal

Typical functions of the control electronics

Current control for solenoid heating compensation

Solenoid heating changes the temporary electrical effective resistance. For this reason, electronic control of the solenoid current makes sense. It is especially important that current control is used in open control circuits (open-loop control mode). However, current control is irrelevant in closed process control circuits.

Adjusting the minimum and maximum solenoid current to the application-specific pressure conditions

The current values must be set under operating conditions – when the valve begins to open and when the valve is at its maximum opening point. The working range of each valve type depends on its nominal diameter and on the pressure conditions (inlet pressure and back pressure) in the system. For all direct-acting solenoid control valves with flow under the seat, the current value at the start of opening decreases as the inlet pressure increases. As the pressure drop increases across the valve, the current value at which the maximum flow rate is reached decreases.

Zero-point shut-off for tight closing of the valve

The zero-point shut-off can be adjusted up to a value of 5% of the maximum input signal. This guarantees tight closing of the valve. In the case of input signals that are lower than originally set, the solenoid current is immediately set to zero. As a result, the valve closes. If the zero-point shut-off is not defined, the valve is controlled with the lowest duty cycle even at 0% set-point value setting default.

Ramp function

Set-point value changes (with a rising or falling edge) can be adjusted with an action delay of up to 10 seconds. This levels out the consequences of sudden set-point value changes, which can cause oscillations in some systems.



Type 8605

- Programmable digital electronics
- Variants: cable plug for direct mounting (terminal strip with PG cable gland or M12 plug, 4-pin)
- DIN rail variant (DIN EN 50022)
- Operating voltage 12 to 24 V DC
- Output signal for valve control, PWM signal: frequency adjustable from 80 Hz to 6 kHz

TYPE 8605

PWM control electronics for solenoid control valves

The Type 8605 digital control electronics control proportional solenoid control valves in the current range of 40 to 2,000 mA. They convert a standard signal into a PWM signal, enabling stepless control of the valve opening and a fluidic variable such as the flow rate. Internal current control ensures a constant solenoid current regardless of the thermal state.

The device can be easily adjusted to the valve and application via the display and buttons. A CAN-based variant (büS) is available for integration into higher-level controllers, which also makes it possible to integrate shut-off valves with time control functions. Parameterisation is conveniently carried out using the Bürkert Communicator software. An optional I/O PCB is available for connecting external sensors or switches.

Internal current control to compensate for solenoid heating	**Converts an analogue input signal into a PWM output signal**
Digital communication (büS) possible	**Optional integrated time control and digital/analogue inputs**



Type 8611

- Electrical connections: multi-pin plug: 8-pin M12, 4-pin M8, 3-pin M8 terminal strip insert for direct mounting with electrical connection according to DIN EN 175301-803
- Sensor inputs (4 to 20 mA, 0 to 10 V, frequency, Pt 100)
- Operating voltage 24 V DC
- Display: double line 8-character LCD with backlight

TYPE 8611

eCONTROL – Universal controller

The universal controller Type 8611 is ideally suited for the construction of compact control systems thanks to its compactness. It is compatible and has been tested with all Bürkert proportional valves and sensors, and can be used in combination with all non-Bürkert control valves with a standard signal (4 to 20 mA, 0 to 10 V or PWM output). The process controller with PI behaviour comes with a variety of auxiliary functions. The process actual value can be connected to one of the three analogue inputs of the universal controller as a standard signal (4 to 20 mA / 0 to 10 V), a frequency signal or a signal from a Pt 100 resistance temperature sensor. The process set-point value can be specified via a current or voltage standard signal or via the keyboard. Specifically for temperature control tasks, there is the option to create a cascade structure with underlying flow control. A wide range of control tasks in fluid technology can be implemented for both liquid and gaseous media by enabling the control of proportional valves and process valves.

Continuous, 2-point, 3-point and on/off control

Efficient ratio control of two media can be implemented

Control of proportional, process and motor valves possible

Stored Bürkert products can be selected (valves, sensors)

Parameters of proportional valve technology

Kv_s value / Q_{Nn} value

Fluidically, the valves can be compared using the Kv_s value (unit m^3/h). This is measured with a water flow rate at 20 °C and 1 bar relative pressure at the valve inlet – compared to 0 bar at the valve outlet.

The Kv_s value can be easily determined using the Bürkert Fluidic Calculator.

Hysteresis

The maximum difference in the flow rate over the full input signal range in the upward and downward direction. This is specified as a % of the flow rate. Hysteresis occurs due to friction and magnetisation.

A good reversal span (sensitivity when the input signal direction is reversed) can compensate for the disadvantages of hysteresis during use in control circuits.

Sensitivity

The minimum set-point value difference that leads to a measurable change in the flow rate. This is specified as a % of the maximum flow rate.

Repeatability

Range within which the flow rate varies when the same input signal, coming from the same direction, is set repeatedly. This is specified as a % of the maximum flow rate.

Turn-down ratio

Ratio of the Kv_s value to the lowest flow rate at which the characteristic curve remains within a tolerance band around the ideal characteristic curve in terms of its height and slope.

Sizing of proportional valves

Calculation of the valve nominal diameter

To ensure that they function correctly, proportional valves must be designed and selected according to their specific task. The most important parameters for selecting a proportional valve are the **Kv value** (specified in cubic metres per hour) and the **pressure range** of the application. In the case of solenoid valves specifically, **the smaller the nominal diameter of the valve or the stronger the solenoid, the higher the switchable maximum pressure**.

The maximum Kv value is calculated using the following parameters:

- Valve inlet pressure
- Valve outlet pressure
- Density of the medium
- Maximum desired flow rate of the medium
- Medium temperature

In the calculation formulas (see the data sheets for the proportional valves), a distinction is made between the states of matter (gaseous, aqueous or vapour) and the flow conditions (supercritical or subcritical).

A suitable valve type and its required nominal diameter can be determined on the basis of the calculated Kv value and the pressure range of the intended application. It is important to note that **the Kv value of the application must be lower than the Kvs value of the valve reached at maximum opening.** Further information on the Kvs value can be found on page 26.

Some countries use the **Cv value** instead of the Kvs value. This characteristic flow rate is specified in US gallons per minute (1 GPM = 0.227 m^3/h) and is determined with water at 60 °Fahrenheit and a pressure difference across the valve of 1 psi (corresponds to 0.069 bar). The **conversion factor between Kv and Cv is 0.857** (Kv is smaller than Cv).

A suitable design (valve nominal diameter identification) is also very important for ensuring that proportional valves function correctly. If the nominal diameter is too large, the valve may reach almost the full flow rate even at a very small opening (stroke). The remaining stroke is no longer used in this case, which also impairs the resolution and the general control quality. If the nominal diameter is too small, on the other hand, the valve no longer achieves the full flow rate. To ensure the system has an acceptable operating characteristic, the influence that the valve has over the flow should not be below 0.3, which means that 30% of the system pressure should drop across the control valve.

Bürkert provides a sizing tool for creating the correct control valve design. It provides an easy way of determining the ideal valve nominal diameter.



Did you know?

Our Fluidic Calculator enables you to calculate Kv factors, flow rates and pressure drops reliably and easily.

Fluidic Calculator

Quick guide

How do you find the right proportional valve?

1

Which medium (fluid) is being controlled?

It is vital to ensure that the medium and all media-contacting valve components are compatible with regard to their chemical and physical behaviour.

2

What is the maximum inlet pressure?

The valve must be able to reliably shut off the maximum pressure occurring in the application. The nominal pressure of the valve must therefore be selected to match the maximum inlet pressure.

3

Which process data is available?

The following parameters must be taken into account when determining the valve nominal diameter (DN):

- Maximum required flow rate Q_{nom}
- Pressure upstream and downstream of the valve p_1, p_2
- The medium temperature T_M

The controllability of the minimum flow rate Q_min is based on the selected valve and its specified measuring span.

K_{vs} of the valve ≥ K_v of the application (ideally around +10%)

Nominal pressure of the valve ≥ maximum applied pressure p_1 upstream of the valve

Product innovation

What makes precise control a measurable advantage in hydrogen processes?

Hydrogen applications require precise pressure, flow rate and temperature adjustment. At the same time, fluidic functions all have to meet demanding requirements when it comes to tightness, materials and safety. The key lies in how reliably all the components interact in the process.

If you generate, distribute, use or test hydrogen, there is a whole range of different tasks that you have to master. In electrolysis, precisely controlled measured quantities have an impact on efficiency. In cooling and temperature control circuits, demand-based control makes it possible to use energy specifically where it is needed. In infrastructure, the pressure and flow rate have to be managed safely even under high loads. And in test benches, it is important that measurement and control tasks run reproducibly.

Taking the example of a fuel cell, it is clear what handling all these tasks looks like in practice. The Type 6020 direct-acting proportional valve takes on robust fuel cell stack pressure control, the Type 6440 safety shut-off valve closes off the supply reliably and without power, and Type 6030 flushes and drains the recirculation circuit.

These three valve types are representative of the hydrogen portfolio available from Bürkert, which covers everything from shut-off and proportional valves to sensors and automation. Its aim is to solve complex fluidic tasks in a way that ensures systems run safely, work efficiently and require little maintenance to keep running. It turns technical complexity into a system that can be reliably controlled.

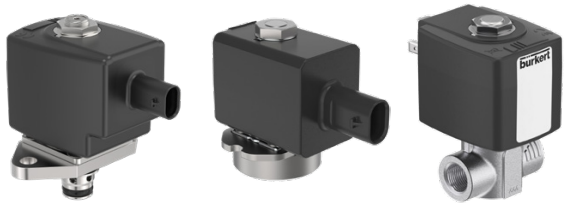

Did you know?

For over 20 years now, Bürkert has been developing fluidics solutions for hydrogen applications – covering everything from generation and distribution to use. It feeds this wealth of experience into products, systems and customised solutions.

Mehr erfahren

- **Precise control ensures stable processes and reproducible results**
- **Variants with energy-saving solenoid with Kick and Drop electronics available**
- **Maximum safety thanks to high level of tightness and increased IP protection**
- **One partner from development to large-scale production**

Customisation & development

THE BÜRKERT SYSTEMHAUS FACILITIES ARE RESPONSIBLE FOR THE EFFICIENT, INNOVATIVE AND COST-EFFECTIVE DEVELOPMENT OF YOUR FLUIDIC SOLUTIONS





Our state-of-the-art Systemhaus facilities specialise in developing fluidic assemblies and solutions according to your precise requirements. A motivated and dedicated team of sales consultants, industry specialists and engineers will work hand in hand to make your project a success – with every aspect of the process under one roof! All of our production infrastructure is located on site, which allows us to respond quickly and flexibly. This combination and concentration of expertise and resources in one place translates into huge gains in efficiency and quality for you.

Why choose Bürkert as your solution partner?

- Interdisciplinary collaboration between Bürkert experts ensures seamless communication and prevents loss of information – for exceptionally efficient processes
- All process steps, ranging from development, prototype assembly and tool construction through to production, take place in one location – for fast-paced development and seamless quality
- We don't think in terms of narrowly defined industry contexts; we are always exploring new possibilities with regard to handling liquids and gases – for new, original solutions that surpass the standards in your industry
- We will use suitable system platforms for your individual solution – for a short time to market and significant cost savings.

With our extensive capacity and full range of services, we will take responsibility for as much of the development process as you want us to and will coordinate all interfaces in order to provide pioneering, integrated solutions.

Bürkert Systemhaus

Automation & digitalisation

FLEXIBLE, NEUTRAL, COMPLETE: OUR APPROACH TO FIND THE BEST SOLUTION



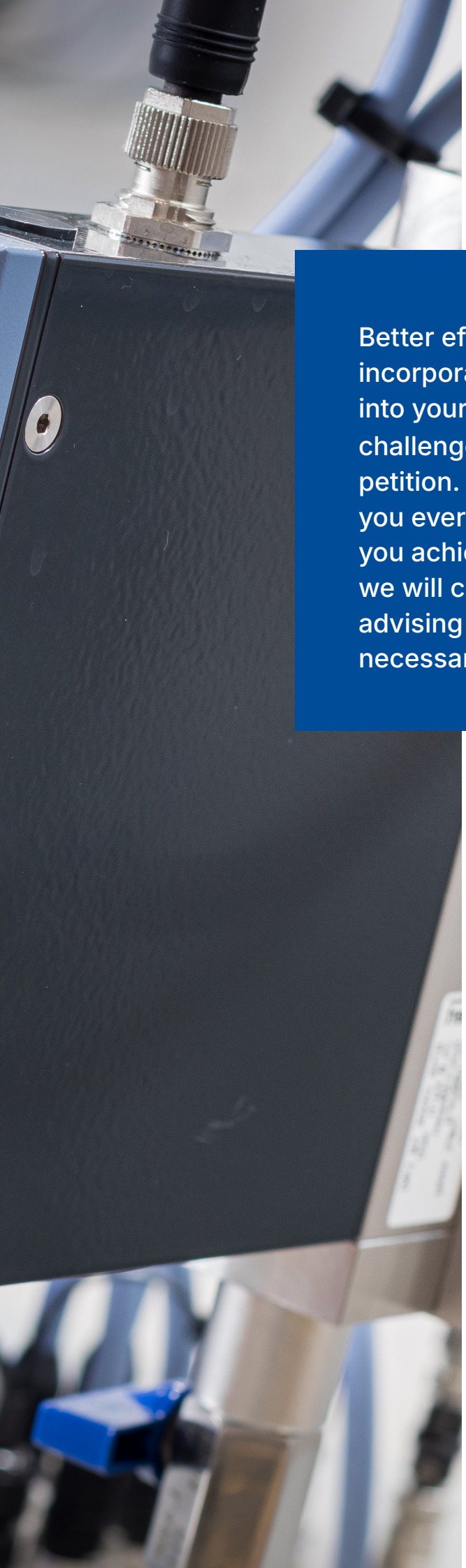

Better efficiency, quality and cost-effectiveness: incorporating optimised automation and digitalisation into your processes, applications and fluidic challenges will ensure that you stay ahead of the competition. As your expert partner, Bürkert will support you every step of the way. Our priority is to make sure you achieve the best possible results. This means that we will consider different manufacturers when advising you – the components we recommend won't necessarily come from us.

Why choose Bürkert as your solution partner?

- We understand your processes, applications and challenges – and will use these insights to develop automation solutions perfectly tailored to your tasks.
- Our advice is neutral and objective – which gives us the freedom to truly find the perfect solution for you.
- Our experts will use innovative approaches and select creative solutions to keep you one step ahead of the competition.
- Unlike other partners, we are not just here to supply components – we will work with you to ensure your success by means of a complete automation and digitalisation concept.
- If you wish, we can take care of the concept, planning and implementation – all from a single source. You won't have to worry about interfaces, compatibility or fine tuning.

When it comes to finding the best solution, we always give 100% – whether you want to assign individual subtasks to us or entrust us with the entire automation and digitalisation process from initial advice right through to start-up.


burkert
Kennlinien
Druck

Bürkert eShop

Bürkert eShop

Your benefits at a glance:

- 24/7 availability of the eShop
- Documents such as data sheets, CAD drawings, operating instructions and EU declarations of conformity always at hand
- View current prices, conditions, delivery times and stock levels at any time
- Download and track orders, delivery notes and invoices at any time
- Create shopping lists and save shopping carts
- Order common items via quick order

Discover these and many other advantages in our Bürkert eShop!



09/2026

Bürkert Fluid Control Systems
Christian-Bürkert-Strasse 13–17
74653 Ingelfingen
Germany

Telephone: +49 7940 10 0
info@burkert.com

www.buerkert.de

Pioneers of Flow.

bürkert
FLUID CONTROL SYSTEMS